ผลกระทบของผลตอบแทนสะสมของหุ้นของบริษัทหลังได้รับการประเมินคะแนน SET ESG rating ครั้งแรก: หลักฐานจากตลาดหลักทรัพย์แห่งประเทศไทย

เตชวัน รัตนไพจิตร สุขสำราญ[1]

วันที่ได้รับบทความ: 26 มิถุนายน 2569 **วันที่แก้ไขบทความ:** 7 กันยายน 2569 **วันที่ตอบรับตีพิมพ์บทความ:** 7 กันยายน 2569

บทคัดย่อ

การค้นคว้านี้มีวัตถุประสงค์เพื่อศึกษาผลกระทบของผลตอบแทนสะสมของหุ้นของบริษัทจดทะเบียนในตลาดหลักทรัพย์แห่งประเทศไทยหลังได้รับการประเมินคะแนน SET ESG Rating ครั้งแรก งานวิจัยใช้ข้อมูลทุติยภูมิของบริษัทจดทะเบียนที่ได้รับการประเมิน SET ESG Rating ในช่วงปี พ.ศ. 2566–2567 โดยคัดเลือกกลุ่มตัวอย่างทั้งสิ้น 200 บริษัท และวัดผลตอบแทนสะสมของหุ้น (Cumulative Return) ภายในระยะเวลา 30 วันหลังการประกาศผลประเมิน การวิเคราะห์ข้อมูลใช้สถิติเชิงพรรณนา การวิเคราะห์สหสัมพันธ์ และการวิเคราะห์สมการถดถอยพหุคูณ โดยควบคุมปัจจัยด้านขนาดของกิจการ อัตราการก่อหนี้ อัตราผลตอบแทนจากสินทรัพย์ และอัตราส่วนมูลค่าตามบัญชีต่อมูลค่าตลาด นอกจากนี้ ยังทดสอบความทนทานของแบบจำลองด้วยการตัดค่าผิดปกติ และการใช้ตัวแปรจำลองแบบลำดับขั้น ผลการวิจัยพบว่า แบบจำลองหลักไม่ปรากฏความสัมพันธ์อย่างมีนัยสำคัญทางสถิติระหว่างคะแนน SET ESG Rating และผลตอบแทนสะสมของหุ้นภายหลังการประกาศผลการประเมินครั้งแรก ผลการทดสอบความทนทานของแบบจำลองทั้งสองวิธีให้ผลลัพธ์ที่สอดคล้องกัน ผลการศึกษานี้สะท้อนให้เห็นว่าตลาดไทยอาจยังไม่ตอบสนองต่อข้อมูลด้าน ESG อย่างชัดเจนในช่วงระยะเวลาสั้น หรือผลกระทบของ ESG อาจเป็นปัจจัยที่ส่งผลต่อกิจการในระยะยาวมากกว่าระยะสั้น งานวิจัยนี้ช่วยเติมเต็มช่องว่างของวรรณกรรมที่เกี่ยวข้องกับ ESG ในบริบทของตลาดทุนไทย และใช้เป็นแนวทางสำหรับการศึกษาในอนาคต โดยเฉพาะการขยายช่วงเวลาการวิเคราะห์หรือพิจารณามิติย่อยของ ESG

คำสำคัญ: ESG, SET ESG Rating, ผลตอบแทนสะสมของหุ้น, ตลาดหลักทรัพย์แห่งประเทศไทย

[1] นักวิจัยอิสระ
ภาควิชาการบัญชี คณะพาณิชยศาสตร์และการบัญชี จุฬาลงกรณ์มหาวิทยาลัย

The impact of Stock Cumulative Return after a company's first ESG rating assessment: evidence from the Stock Exchange of Thailand

Thechawan Rattanapaijit Suksamran[1]

Received: June 26, 2026 **Revised:** September 7, 2026 **Accepted:** September 8, 2026

Abstract

This research aims to examine the impact of SET ESG Rating scores on the stock cumulative return of companies listed on the Stock Exchange of Thailand following their first rating assessment. The study utilizes secondary data from listed companies that received a SET ESG Rating during 2023 to 2024, with a sample of 200 companies selected. Stock cumulative returns are measured over a 30-day window following the announcement of rating results. The analysis employs descriptive statistics, correlation analysis, and multiple regression analysis, controlling for firm size, leverage ratio, return on assets, and book-to-market ratio. Model robustness is further tested through outlier removal and the use of ordinal dummy variables. The findings reveal no statistically significant relationship between SET ESG Rating scores and cumulative stock returns in the period following the first rating announcement. Both robustness tests yield consistent results. These findings suggest that the Thai market may not yet respond clearly to ESG-related information over a short time horizon, or that ESG factors may have a greater influence on firms over the long term rather than the short term. This research helps fill a gap in the literature relating to ESG in the context of the Thai capital market, and serves as a foundation for future studies, particularly those extending the analysis window or examining sub-dimensions of ESG.

Keywords: ESG, SET ESG Rating, Stock Cumulative Returns, Stock Exchange of Thailand

[1] Independent researcher

1. บทนำ

แนวความคิดในเรื่องสิ่งแวดล้อม สังคม และธรรมาภิบาล (Environmental, Social, Governance : ESG) ได้รับการยอมรับอย่างเป็นทางการในช่วงปี 2004 โดยมีจุดเริ่มต้นมาจากรายงานชื่อเรื่อง "Who Cares Wins" เกิดจากความร่วมมือระหว่างสถาบันการเงินกับองค์การสหประชาชาติเพื่อเน้นย้ำถึงความสำคัญของปัญหาสิ่งแวดล้อม สังคม และการกำกับดูแล (United Nations Global Compact & UNEP Finance Initiative, 2004)

ท่ามกลางบริบทที่โลกกำลังเผชิญกับความท้าทายที่ทวีความซับซ้อนมากขึ้น ไม่ว่าจะในด้านสิ่งแวดล้อม สังคม และการกำกับดูแลกิจการ ส่งผลให้ประเด็นด้าน ESG มีบทบาทสำคัญเพิ่มขึ้นอย่างต่อเนื่องในปัจจุบัน ความสนใจของภาคธุรกิจและนักลงทุนที่มีต่อ ESG จึงไม่ได้เป็นเพียงกระแสหรือความนิยมในระยะสั้น หากแต่เกิดจากปัจจัยพื้นฐานหลายประการที่มีผลต่อความสามารถในการดำเนินธุรกิจและความสำเร็จขององค์กรในระยะยาว ตลอดจนผลประโยชน์ของผู้มีส่วนได้เสียโดยรวม ทั้งนี้ นักลงทุนสถาบันและนักลงทุนรายย่อยจำนวนมากเริ่มตระหนักว่าปัจจัยด้าน ESG มิได้เป็นเพียงประเด็นด้านจริยธรรมเท่านั้น แต่ยังทำหน้าที่เป็นตัวชี้วัดความเสี่ยงและโอกาสขององค์กรในการสร้างผลตอบแทนอย่างยั่งยืนในระยะยาว (The Corporate Governance Institute)

ตลาดการลงทุนด้าน ESG ในระดับโลกมีแนวโน้มขยายตัวอย่างต่อเนื่องและมีนัยสำคัญ โดยในปี ค.ศ. 2024 มูลค่าตลาดการลงทุน ESG ทั่วโลกอยู่ที่ประมาณ 29.86 ล้านล้านดอลลาร์สหรัฐ และมีคาดการณ์ว่าจะเติบโตด้วยอัตราการเติบโตเฉลี่ยต่อปี (Compound Annual Growth Rate) ร้อยละ 18.82 ในช่วงปี ค.ศ. 2025–2034 ซึ่งอาจส่งผลให้มูลค่าตลาดเพิ่มขึ้นเป็นประมาณ 167.49 ล้านล้านดอลลาร์สหรัฐภายในปี ค.ศ. 2034 เมื่อพิจารณาสัดส่วนตลาดการลงทุน ESG จำแนกตามภูมิภาค พบว่าอเมริกาเหนือเป็นภูมิภาคที่มีส่วนแบ่งตลาดสูงที่สุด คิดเป็นร้อยละ 37 รองลงมาคือยุโรปและเอเชียแปซิฟิก ซึ่งมีสัดส่วนร้อยละ 30 และร้อยละ 24 ตามลำดับ (Precedence Research, 2025)

ในบริบทของตลาดทุนไทย ตลาดหลักทรัพย์แห่งประเทศไทยได้ดำเนินการคัดเลือกและประกาศรายชื่อบริษัทที่ได้รับการจัดอันดับเป็น “หุ้นยั่งยืน SET ESG Ratings” ซึ่งเดิมใช้ชื่อว่า Thailand Sustainability Investment (THSI) อย่างต่อเนื่องตั้งแต่ปี พ.ศ. 2566 เป็นต้นมา โดยมีบทบาทสำคัญในการส่งเสริมและจูงใจการลงทุนในหลักทรัพย์ของบริษัทที่ให้ความสำคัญกับธรรมาภิบาลและการดำเนินงานด้าน ESG ทั้งนี้ ข้อมูลจากสำนักงานคณะกรรมการกำกับหลักทรัพย์และตลาดหลักทรัพย์ (2567) ระบุว่า ณ สิ้นเดือนพฤษภาคม พ.ศ. 2567 กองทุน Thai ESG มีมูลค่าสินทรัพย์สุทธิรวมทั้งสิ้นสูงมากถึง 6,844 ล้านบาท

The Mediating Role of Accounting Information System (AIS) Maturity between Corporate Governance and ESG Performance: Evidence from Thai Listed Companies

Papon Worawechtanakul[1]

Received: July 9, 2026 **Revised:** September 9, 2026 **Accepted:** September 11, 2026

Abstract

This study investigates the mediating role of Accounting Information System (AIS) Maturity in the relationship between Corporate Governance (CG) and Environmental, Social, and Governance (ESG) performance among Thai listed companies. Secondary data from 110 non-financial firms listed on the Stock Exchange of Thailand (SET) between 2021 and 2024 (440 firm-year observations) were analysed using Structural Equation Modelling (SEM) with bootstrapped mediation tests. The results show that Corporate Governance is positively associated with both AIS Maturity and ESG performance, and that AIS Maturity is positively associated with ESG outcomes; a significant indirect effect indicates partial mediation. The indirect effect is stable across alternative polarity-weighting schemes for the text-mined index, across the environmental, social, governance, and controversy-adjusted ESG measures, and under a lagged specification imposing temporal precedence, but attenuates once firm fixed effects are absorbed and when the index is rescaled by report length, so the estimate is interpreted as a robust conditional association rather than a settled causal effect. The findings establish a Governance–Technology–Sustainability Nexus, positioning digital readiness as a critical bridge between governance quality and sustainability performance, with implications for firms, regulators, and investors.

Keywords: Corporate Governance, Accounting Information System (AIS), ESG

[1] Graduate Student, Master of Accounting Program (MAP), Faculty of Commerce and Accountancy (Thammasat Business School), Thammasat University

บทบาทการเป็นตัวแปรส่งผ่านของวุฒิภาวะระบบสารสนเทศทางการบัญชี (AIS) ระหว่างการกำกับดูแลกิจการและผลการดำเนินงานด้านสิ่งแวดล้อม สังคม และธรรมาภิบาล (ESG): หลักฐานเชิงประจักษ์จากบริษัทจดทะเบียนในตลาดหลักทรัพย์แห่งประเทศไทย

ปพน วรเวชธนกุล[1]

วันที่ได้รับบทความ: 9 กรกฎาคม 2569 **วันที่แก้ไขบทความ:** 9 กันยายน 2569 **วันที่ตอบรับตีพิมพ์บทความ:** 11 กันยายน 2569

บทคัดย่อ

งานวิจัยนี้ศึกษาบทบาทการเป็นตัวแปรส่งผ่านของวุฒิภาวะระบบสารสนเทศทางการบัญชี (AIS) ในความสัมพันธ์ระหว่างการกำกับดูแลกิจการ (CG) และผลการดำเนินงานด้านสิ่งแวดล้อม สังคม และธรรมาภิบาล (ESG) ของบริษัทจดทะเบียนในประเทศไทย การศึกษาใช้ข้อมูลทุติยภูมิจากบริษัทที่มิใช่สถาบันการเงินจำนวน 110 แห่งที่จดทะเบียนในตลาดหลักทรัพย์แห่งประเทศไทย (SET) ระหว่างปี พ.ศ. 2564–2567 (ค.ศ. 2021–2024) รวม 440 ปี-บริษัทโดยวิเคราะห์ด้วยแบบจำลองสมการโครงสร้าง ร่วมกับการทดสอบตัวแปรส่งผ่านด้วยวิธี bootstrapping ผลการศึกษาพบว่าการกำกับดูแลกิจการมีความสัมพันธ์เชิงบวกทั้งกับวุฒิภาวะของ AIS และผลการดำเนินงานด้าน ESG และวุฒิภาวะของ AIS มีความสัมพันธ์เชิงบวกกับผลลัพธ์ด้าน ESG โดยพบผลทางอ้อมอย่างมีนัยสำคัญซึ่งบ่งชี้ถึงการเป็นตัวแปรส่งผ่านบางส่วน ผลทางอ้อมดังกล่าวมีความเสถียรภายใต้รูปแบบการถ่วงน้ำหนักขั้วความหมายที่แตกต่างกันของดัชนีที่ได้จากการทำเหมืองข้อความ ภายใต้ตัวชี้วัด ESG ทั้งด้านสิ่งแวดล้อม สังคม ธรรมาภิบาล และคะแนนที่ปรับด้วยข้อโต้แย้งรวมถึงภายใต้แบบจำลองที่หน่วงเวลาซึ่งกำหนดลำดับเวลาก่อนหลัง แต่ผลดังกล่าวลดทอนลงเมื่อควบคุมผลกระทบคงที่เฉพาะบริษัท และเมื่อปรับดัชนีตามความยาวของรายงาน ด้วยเหตุนี้ผลการศึกษาจึงควรตีความว่าเป็นความสัมพันธ์เชิงเงื่อนไขที่มีความน่าเชื่อถือ มิใช่ความสัมพันธ์เชิงสาเหตุที่ยุติแล้ว ผลการศึกษานี้นำไปสู่การสร้างกรอบความเชื่อมโยงระหว่างการกำกับดูแลกิจการ เทคโนโลยี และความยั่งยืน โดยชี้ให้เห็นว่าความพร้อมด้านดิจิทัลเป็นสะพานเชื่อมที่สำคัญระหว่างคุณภาพการกำกับดูแลกิจการและผลการดำเนินงานด้านความยั่งยืน ซึ่งมีนัยเชิงปฏิบัติต่อบริษัท หน่วยงานกำกับดูแล และนักลงทุน

คำสำคัญ: การกำกับดูแลกิจการ, ระบบสารสนเทศทางการบัญชี, สิ่งแวดล้อม สังคม และธรรมาภิบาล

---

[1] นักศึกษาปริญญาโท หลักสูตรบัญชีมหาบัณฑิต โครงการ Master of Accounting Program (MAP) คณะพาณิชยศาสตร์และการบัญชี มหาวิทยาลัยธรรมศาสตร์

1. Introduction

Over the past decade, Environmental, Social, and Governance (ESG) performance has become a central benchmark for evaluating corporate sustainability, risk, and long-term value creation. Investors, regulators, and stakeholders now demand that firms not only disclose their ESG activities but also demonstrate measurable outcomes, making it important to distinguish ESG disclosure quality from actual ESG performance, such as reductions in emissions or improvements in workplace safety and board diversity (Amel-Zadeh & Serafeim, 2018; Mkadmi & Daafous, 2025; Qin, 2024). Strong ESG performance is associated with improved access to capital, operational resilience, and greater stakeholder trust, reinforced by international frameworks such as the Global Reporting Initiative and the UN Principles for Responsible Investment.

Thailand is increasingly aligned with these global trends through the Stock Exchange of Thailand (SET) sustainability indices and ESG disclosure requirements. Nevertheless, even as leading Thai firms improve their reporting, disparities persist in the depth, quality, and credibility of underlying ESG outcomes relative to global peers, pointing to the need for research targeting substantive performance rather than narrative reporting (Pratama et al., 2022).

Corporate governance (CG) is widely recognised as a key driver of ESG performance, as independent boards, transparency, accountability, and stakeholder engagement promote sustainability initiatives (Lagasio & Cucari, 2019; Umar et al., 2024). However, converting governance intent into real ESG performance requires effective technological and informational infrastructure. Mature Accounting Information Systems (AIS) provide reliable, timely, and comprehensive data for monitoring, measuring, and reporting ESG activities, for example through enterprise resource planning (ERP) systems and ESG data dashboards (Adardour et al., 2025; Bourgeois, 2014; Yazdi et al., 2019). By reducing information asymmetry and enhancing transparency, high AIS maturity amplifies the value of strong governance and bridges execution gaps observed in less technologically mature organisations (Mkadmi & Daafous, 2025; Qin, 2024).

Existing literature has focused largely on the relationship between corporate governance and ESG disclosure quality in developed markets, often neglecting the mediating role of AIS maturity and the distinction between disclosure and actual performance. Studies examining how AIS maturity enables governance structures to drive real ESG outcomes remain scarce in Southeast Asia, including

Thailand (Adardour et al., 2025; Mkadmi & Daafous, 2025). This study addresses these gaps by investigating the mediating role of AIS Maturity in the relationship between corporate governance and ESG performance among Thai non-financial listed companies over 2021–2024, using Structural Equation Modelling (SEM) on 440 firm-year observations. Financial-sector firms are excluded owing to their distinct reporting structures and regulatory frameworks.

Examining this mechanism in Thailand is important for three reasons, and the setting is expected to produce results that differ from developed-market evidence in specific ways. First, Thai listed firms operate under a governance regime that is formally advanced but unevenly implemented. The IOD Corporate Governance Report applies a common, internationally benchmarked standard to every listed firm, yet ownership concentration, family control, and the partly legitimacy-driven adoption of governance codes differ markedly from the dispersed-ownership settings in which most CG–ESG evidence has been produced (Pratama et al., 2022; Umar et al., 2024). Where governance structures are adopted in part for signalling purposes, governance quality translates into substantive ESG outcomes less automatically than in developed markets, and the intervening capability that converts board oversight into measurable performance becomes correspondingly more decisive. Second, digital adoption among Thai firms is considerably more dispersed than governance quality itself: firms holding similar CG ratings differ substantially in system integration, data management, and information security. This dispersion supplies the variation in AIS maturity required to identify a mediating effect — variation that is largely compressed in developed markets, where enterprise-grade accounting systems are close to universal and where a technological mediator would therefore be difficult to detect. Third, ESG assurance infrastructure in Thailand remains at an early stage, so the credibility of reported ESG outcomes depends more heavily on a firm's own information systems than in jurisdictions with mature assurance markets (Adardour et al., 2025; Pratama et al., 2024). Taken together, these conditions lead the study to expect a positive but only partially direct CG–ESG relationship, accompanied by a significant technological transmission channel that developed-market studies have had little scope to observe.

These considerations also structure the hypotheses tested below. Agency and stakeholder reasoning imply that governance mechanisms simultaneously constrain managerial opportunism and institutionalise stakeholder claims, producing a direct association between governance quality and

ESG performance. The Resource-Based View implies that governance additionally operates as an allocative capability that directs resources towards accumulating a valuable and difficult-to-imitate informational resource, so that governance quality should be associated with AIS maturity. Task–Technology Fit reasoning implies that, because ESG management is an information-intensive task, closer fit between AIS capability and that task should be associated with superior ESG performance. Combining the three arguments yields the expectation that AIS maturity transmits part, but not all, of the governance effect. Section 2 develops each argument in full before the corresponding hypothesis is stated.

The study contributes in three ways. Theoretically, it integrates the Resource-Based View (RBV) and Task–Technology Fit (TTF) perspectives to explain how governance quality translates into sustainability outcomes through technological capability. Methodologically, it develops a replicable, objective text-mining measure of AIS Maturity from corporate disclosures. Practically, the findings can assist regulators such as the SET and the Securities and Exchange Commission (SEC) in refining CG and ESG evaluation criteria, and can guide firms in leveraging AIS investments to meet growing investor expectations for transparent, outcome-based disclosure (Amel-Zadeh & Serafeim, 2018; Pratama et al., 2024).

2. Literature Review and Hypothesis Development

2.1 Corporate Governance and ESG Performance

Corporate governance is the structured system of principles, processes, and policies through which companies are directed, managed, and held accountable to internal and external stakeholders, encompassing leadership, risk controls, ethical standards, and decision-making frameworks (Buchetti et al., 2025; Lagasio & Cucari, 2019). Two theoretical rationales explain why CG influences ESG performance. Agency Theory emphasises that strong governance mechanisms, such as independent boards and audit committees, mitigate the principal–agent problem, constrain managerial opportunism, and ensure accountability for tangible ESG outcomes (Buchetti et al., 2025; Jensen & Meckling, 1976). Stakeholder Theory broadens this lens, positing that well-designed governance structures embed the interests of employees, customers, suppliers, communities, and regulators into decision-making, thereby institutionalising responsible and measurable ESG practices (Donaldson & Preston, 1995).

Empirical research consistently finds that effective governance structures are associated with superior ESG performance. Board independence, gender diversity, sustainability committees, and well-structured director compensation correlate positively with ESG scores and outcomes, and meta-analytical evidence confirms that board independence, board size, and female directors enhance ESG disclosure and performance (Buchetti et al., 2025; Lagasio & Cucari, 2019). Specific board attributes carry distinct rationales. Independent directors, free from internal management pressures, are better positioned to advocate long-term value creation, transparent reporting, and the integration of ESG principles into core operations (Lagasio & Cucari, 2019). Female directors are associated with more collaborative decision-making, improved risk management, and stronger commitment to social responsibility, consistent with stakeholder theory (Mkadmi & Daafous, 2025). CEO duality, in which one individual holds both the CEO and board chair positions, can weaken monitoring capacity and shift executive focus toward short-term financial metrics at the expense of stakeholder-oriented ESG investment (Buchetti et al., 2025). A dedicated board-level sustainability committee institutionalises ESG oversight and signals substantive commitment to stakeholders (Mkadmi & Daafous, 2025). In emerging markets such as Thailand, where institutional frameworks are still evolving, governance plays a particularly vital role in ensuring the credibility of ESG reports; the publicly disclosed CG scores of the Thai Institute of Directors (IOD) provide a reliable proxy for governance effectiveness.

Evidence from developing and emerging markets qualifies these findings in ways that matter for the present study. Cross-country work shows that the governance attributes associated with ESG outcomes in advanced economies operate less uniformly where ownership is concentrated and enforcement is uneven (Mkadmi & Daafous, 2025). In Saudi Arabia, several conventional governance mechanisms display weak or inconsistent associations with ESG disclosure, indicating that formal structures do not automatically produce substantive outcomes (Umar et al., 2024). Mixed-methods evidence from an emerging-market setting similarly finds that ESG disclosure is driven as much by legitimacy pressures and resource availability as by board composition (Adardour et al., 2025). Within Southeast Asia, assessments of sustainability reporting against the IFRS S1 and S2 frameworks reveal wide dispersion in the completeness and comparability of disclosures across firms subject to broadly similar regulation (Pratama et al., 2022, 2024), and Chinese evidence indicates that firm-level digital capability is a principal source of that dispersion (Hu & Song, 2024; Zhang & Wang, 2024). Studying firms in these markets is therefore not merely a matter of extending geographic coverage. Because

governance quality is compressed by common regulatory standards while implementation capability is not, developing markets offer the conditions under which the capability channel linking governance to sustainability outcomes can actually be observed — conditions largely absent from developed-market samples in which both governance and enterprise systems are near-uniformly advanced.

The literature nevertheless cautions that CG alone cannot guarantee measurable ESG improvements. Governance must be complemented by mature information systems that enable the collection, analysis, and reporting of high-quality ESG data (Buchetti et al., 2025). AIS therefore serves as the technological backbone that transforms governance intent into traceable, auditable, and data-driven ESG practice, motivating the examination of AIS Maturity as a mediating mechanism.

2.2 AIS Maturity

An Accounting Information System is a holistic framework of people, processes, and technology designed to collect, store, manage, and process financial and non-financial data into decision-useful information (Bachmid, 2016; Yazdi et al., 2019). AIS maturity extends beyond computerisation to describe the extent to which a firm's AIS is technologically advanced, integrated across business functions, and strategically aligned with organisational objectives (Garbin Praničević et al., 2011; Yazdi et al., 2019). Yazdi et al. (2019) identified and validated nine factors determining AIS maturity, spanning data, hardware, network, software, human resources, organisation and management, financial processes, information technology, and system security. In the contemporary digital economy this technological maturity is critically important: the growing demand for transparent, reliable, and comprehensive ESG disclosure requires systems capable of managing vast and diverse datasets, transforming compliance from a burden into a strategic asset (Liu, 2023).

Consistent with this study's design, the human and managerial elements of AIS are proxied by the Corporate Governance construct, allowing the AIS Maturity measure to focus exclusively on technological infrastructure and avoiding conceptual overlap between governance and technology. The seven technology-related factors of Yazdi et al. (2019) are consolidated into four higher-order dimensions: (1) Core IT Infrastructure — hardware, network/server, and IT services forming the digital backbone; (2) System Integration — software quality and the integration and automation of financial and accounting processes; (3) Advanced Data Management — data accessibility, accuracy, governance, and analytics capability; and (4) System & Data Security — protection mechanisms, access

controls, and compliance with information-security standards. These dimensions align with the Information and Communication principle of the COSO framework and the IT governance and management objectives of COBIT 2019, reinforcing their conceptual validity.

The strategic importance of this technological platform is well grounded in theory. From the Resource-Based View, a mature AIS is a valuable, rare, and difficult-to-imitate resource conferring sustainable competitive advantage (Barney, 1991; Buchetti et al., 2025). The Task–Technology Fit model further suggests that performance is enhanced when technological capabilities align with task demands; modern ESG management is an information-intensive task requiring the integration and analysis of diverse non-financial data, so a strong fit between these requirements and AIS capabilities is essential for high-quality ESG outcomes (Goodhue & Thompson, 1995; Hentati & Boulila, 2024). Because prior measurement approaches based on surveys or capability models such as COBIT are subjective and difficult to scale (Garbin Praničević et al., 2011; Yazdi et al., 2019), this study operationalises AIS Maturity through automated text-mining of firm disclosures, as detailed in Section 3.

The Resource-Based View is introduced here not as an alternative to the agency and stakeholder arguments of Section 2.1 but as the perspective that completes them. Agency Theory explains why governance is needed: separation of ownership and control creates monitoring problems that independent boards and audit committees are designed to resolve. Stakeholder Theory explains whose claims governance must internalise, extending the object of accountability from shareholders to employees, communities, and regulators. Neither perspective, however, explains how an accountability obligation becomes an observable sustainability outcome. Both are essentially theories of intent and obligation; they specify what boards should pursue, not what firms can deliver. The Resource-Based View supplies the missing capability condition by treating the firm as a bundle of resources whose heterogeneity explains persistent performance differences among firms facing identical obligations (Barney, 1991). Applied to this setting, monitoring demands generated by agency reasoning and the multi-stakeholder reporting obligations generated by stakeholder reasoning are both information-intensive, and satisfying them requires an informational resource that is valuable, rare, and costly to imitate. Task–Technology Fit then specifies the conditions under which that resource yields performance: capability improves outcomes only where technological characteristics

match task requirements (Goodhue & Thompson, 1995). The three perspectives therefore operate at different points in a single causal chain — agency and stakeholder reasoning establish the governance mandate, the Resource-Based View identifies the capability that determines whether the mandate can be executed, and Task–Technology Fit specifies the alignment through which that capability is converted into ESG performance. This layered logic is what motivates a mediation rather than a direct-effects specification.

2.3 The Mediating Role of AIS Maturity

A mediating variable explains the mechanism through which an independent variable influences a dependent variable. In this study, AIS Maturity is conceptualised as the digital infrastructure that enables the strategic intent and oversight functions of corporate governance to be translated into tangible ESG performance: strong governance allocates resources toward ESG initiatives, while the firm's technological capability determines how efficiently those resources are deployed into data collection, integration, monitoring, and auditable reporting (Alawaqleh, 2021; Buchetti et al., 2025).

Prior evidence supports mediation models involving information systems. Alawaqleh (2021) found that AIS significantly mediates the relationship between internal control and employee performance, demonstrating that a governance mechanism's effectiveness is channelled through the information system. Hu and Song (2024) established that digital transformation enhances ESG performance through improved information transparency and technological innovation, and analogous mediation effects have been documented where ESG performance improves accounting information quality by reducing information asymmetry and financing constraints (Liu, 2023). This body of work suggests that a firm's underlying systems and capabilities are critical for explaining variation in performance outcomes, even among firms with similarly strong governance structures. Nevertheless, prior studies largely treat governance and sustainability as independent constructs and overlook the digital systems that operationalise governance directives, a gap especially salient in emerging markets such as Thailand where digital adoption varies widely despite uniform governance regulation (Hu & Song, 2024; Pratama et al., 2022). This study therefore posits a clear conceptual pathway: strong corporate governance sets the strategic direction and allocates resources for ESG initiatives; a mature AIS provides the technological capability for efficient data collection, integration, and analysis; and this capability, in turn, leads to improved ESG performance.

2.4 Hypothesis Development

Building on the literature and theoretical perspectives above, each hypothesis is developed in turn and then stated formally.

Corporate governance is expected to influence ESG performance directly. Agency reasoning holds that independent boards, audit committees, and disclosure controls constrain managerial discretion over the allocation of resources to activities whose payoffs are diffuse and long-dated, of which environmental and social investment is a leading example (Jensen & Meckling, 1976). Stakeholder reasoning holds that governance structures institutionalise non-shareholder claims within board decision-making, converting ethical commitment into recurring oversight (Donaldson & Preston, 1995). Empirical work in both developed and emerging markets is broadly consistent with these arguments, although the strength of the association varies with enforcement quality and ownership concentration (Lagasio & Cucari, 2019; Moffitt et al., 2024). In the Thai setting, where the IOD rating aggregates board structure, transparency, and risk-management practice into a single externally validated assessment, higher-rated firms are expected to record stronger substantive ESG outcomes rather than merely fuller disclosure (Buchetti et al., 2025).

H1: Corporate governance is positively associated with ESG performance.

Governance is also expected to shape the firm's informational capability. Under the Resource-Based View, accumulating a valuable and difficult-to-imitate resource requires sustained resource commitment, and the decision to invest in system integration, data governance, and information security is an allocation decision taken under board oversight (Barney, 1991; Buchetti et al., 2025). Boards that are effectively monitored and held accountable for the reliability of reported information have a direct interest in the systems that generate it, since deficient systems expose directors to reporting failure and assurance qualification. Governance quality is therefore expected to be reflected in the technological maturity of the accounting information system, an argument consistent with evidence that internal control quality and information system investment move together (Yazdi et al., 2019).

H2: Corporate governance is positively associated with AIS maturity.

The capability, once established, is expected to improve sustainability outcomes. ESG management is information-intensive in a way that financial reporting is not: it requires the collection of

heterogeneous non-financial data from dispersed operating units, their integration onto a common basis, and their verification to a standard adequate for external assurance. Task–Technology Fit reasoning predicts that performance improves as technological capability aligns with task demands (Goodhue & Thompson, 1995), and the demands of ESG measurement correspond closely to the four technological dimensions specified in Section 2.2 (Hentati & Boulila, 2024; Wijayanti et al., 2024). A firm with integrated systems, disciplined data management, and robust security can measure emissions, safety, and workforce indicators at a granularity that supports genuine target-setting and verification; a firm without them can report only what it is able to assemble retrospectively (Zhang & Wang, 2024).

H3: AIS maturity is positively associated with ESG performance.

Combining the preceding arguments produces the mediation prediction. Governance establishes the mandate and allocates the resources; the accounting information system determines the firm's capacity to execute that mandate; and execution capacity is reflected in measured ESG performance (Alawaqleh, 2021; Buchetti et al., 2025). Because governance also operates through channels that are not technological — tone at the top, ethical leadership, and direct stakeholder engagement — the transmission through AIS maturity is expected to be partial rather than complete (Hentati & Boulila, 2024).

H4: AIS maturity mediates the relationship between corporate governance and ESG performance.

2.5 Conceptual Framework

Figure 1 presents the conceptual framework. Corporate Governance serves as the independent variable, hypothesised to influence ESG Performance directly (H1) and indirectly through AIS Maturity (H2–H4). AIS Maturity, the mediating variable, is a composite index derived from text-mined disclosures through PCA, and ESG Performance, the dependent variable, is measured by the Refinitiv ESG score. Firm size, firm age, leverage, industry, and year are included as control variables.

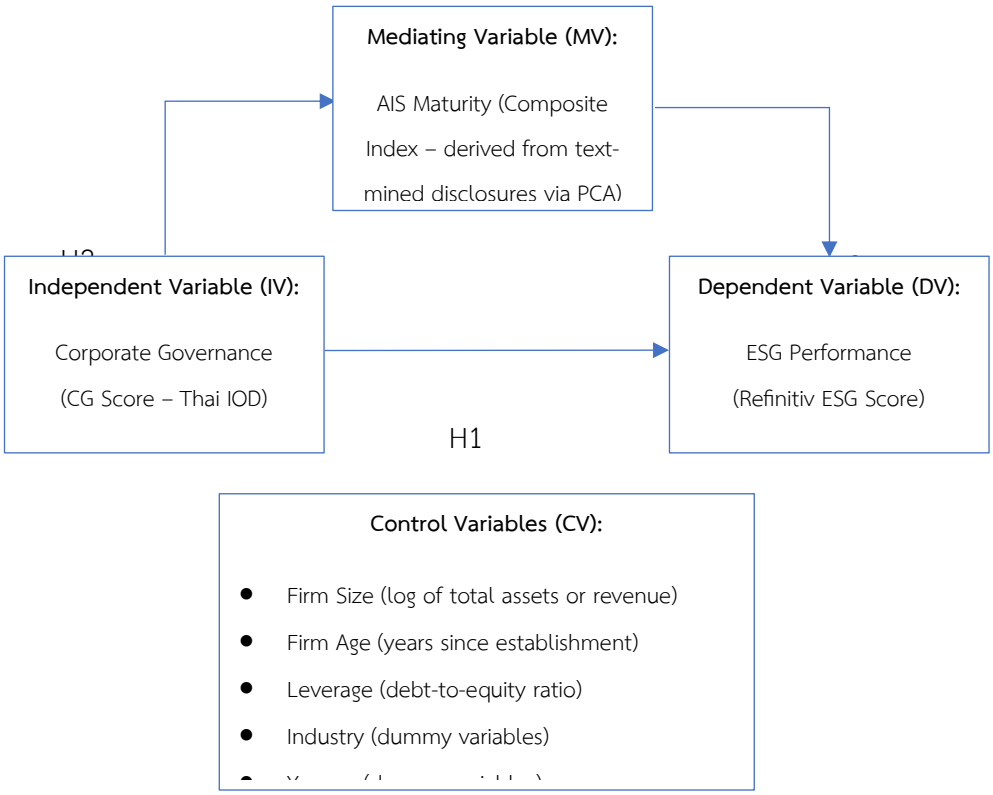

Figure 1 Conceptual framework

3. Research Methodology

3.1 Research Design

This study adopts a quantitative, explanatory–correlational design based on secondary data from publicly available corporate disclosures (Form 56-1 One Reports and sustainability reports) and third-party databases (Refinitiv). SEM is employed because it permits simultaneous estimation of measurement and structural models, enabling the testing of direct and indirect causal paths within a partial mediation framework in which CG influences ESG performance both directly and through AIS Maturity. To operationalise AIS Maturity, computational text-mining is integrated with Principal Component Analysis, contributing methodologically to the growing use of computational techniques in accounting and sustainability research.

3.2 Population and Sample

The target population comprises all SET-listed companies from 2021 to 2024. Purposive sampling identified firms that (1) appear in the IOD Corporate Governance Report (CGR), (2) publicly

disclose ESG-related information through Form 56-1 One Reports or standalone sustainability reports, and (3) have Refinitiv ESG scores. Financial institutions were excluded owing to distinct regulatory frameworks and non-comparable reporting standards. As shown in Table 1, the selection process reduced the initial 671 SET-listed firms to 110 eligible non-financial firms, yielding 440 firm-year observations. The 2021–2024 window captures the post-pandemic acceleration of corporate digitalisation and the rapid standardisation of ESG reporting in Thailand (Zhang & Wang, 2024). The sample exceeds the recommended threshold of ten cases per estimated parameter, ensuring adequate statistical power for SEM (Hair et al., 2017).

Table 1 Sample-selection process of firms

Step	Screening Criteria	Description / Rationale	Firms Remaining
1	Initial population	All SET-listed firms (Refinitiv database)	671
2	ESG data availability	Firms with complete Refinitiv ESG scores (2021–2024)	148
3	Industry screening	Excluded financial institutions (non-comparable ESG regimes)	126
4	Text-mining eligibility	Firms with English, machine-readable Form 56-1 or sustainability reports	110
Note. The text-mining eligibility criterion ensured that firms disclosed their Form 56-1 One Reports in English and in machine-readable format, which was necessary for accurate extraction of AIS-related terms using the automated Python script.			

3.3 Variables and Measurement

Corporate Governance (independent variable) is measured by the composite CG score from the CGR, jointly published by the IOD and the SET. The CGR provides a standardised evaluation of governance quality across shareholder rights, board structure, risk management, transparency, and disclosure, reported on a five-level scale where higher scores reflect stronger governance. Board-level attributes — board independence, gender diversity, CEO duality, and the presence of a sustainability

committee — were additionally collected from Refinitiv as descriptive indicators to enrich contextual understanding, but do not enter the structural model.

ESG Performance (dependent variable) is measured by the Refinitiv ESG score, a comprehensive metric based on more than 450 standardised indicators that captures actual performance in environmental stewardship, social responsibility, and governance rather than disclosure effort alone, providing a comparable benchmark across firms.

AIS Maturity (mediating variable) is measured through a five-stage computational workflow applied to the English versions of Form 56-1 One Reports. First, reports were programmatically retrieved from the SEC Thailand portal using firm identifiers from the SET. Second, keyword lexicons were developed for each of the four technological dimensions, built from IT-control frameworks (COBIT, COSO, ISO 27001) and iteratively refined against observed Thai disclosures; each keyword was paired with contextual action verbs carrying polarity weights of 1.0 (strong operational evidence, e.g., “implemented”), 0.6 (partial implementation, e.g., “developed”), and 0.3 (weak or intentional mention, e.g., “plan”). Third, a custom Python text-mining engine identified keyword–verb co-occurrences using regular expressions within defined context windows, applying paragraph-level caps to prevent redundant rhetorical mentions from inflating scores. Fourth, the weighted matches were summed at the firm-year level to give a score for each of the four dimensions. Finally, PCA was applied to the four standardised dimension scores, and the first principal component was retained as the composite AIS Maturity Index, consistent with validated practice in prior AIS maturity research (Yazdi et al., 2019). Because the dimension scores entering the PCA are sums of weighted matches rather than length-scaled rates, the index is sensitive to report length; this property, and the consequences of removing it, are examined directly in Sections 4.3 and 4.7.

Because the credibility of the index rests on these lexicons, their construction is reported in full. The starting vocabulary was derived deductively from established reference frameworks rather than from ad hoc reading: the IT governance and management objectives of COBIT 2019 for Core IT Infrastructure and System Integration, the Information and Communication component of the COSO framework for Advanced Data Management, and the Annex A control domains of ISO/IEC 27001 for System and Data Security. The four-dimension structure follows the technology-related factors identified and validated by Yazdi et al. (2019), so that each dimension inherits a construct definition

already established in the AIS maturity literature. The deductive list was then refined inductively against the disclosure corpus itself: 123 of the 333 retained terms (37%) are annotated in the dictionary with the specific company disclosure that motivated their inclusion (for example, a system or vendor name observed in practice), while the remaining terms were retained on conceptual grounds from the source frameworks; terms that proved ambiguous or tautological with the outcome construct were removed. In particular, "ESG Disclosure" and "ESG Reporting" were excluded from the Data Management dimension despite framework relevance, because their retention would let the AIS Maturity Index partly measure the same construct as the ESG Performance outcome it is used to explain. The final dictionaries comprise 333 active terms in total (Core IT Infrastructure 85, System Integration 82, Advanced Data Management 80, System and Data Security 86) and are reproduced in full in Appendix A, together with the polarity verb list, so that the measure can be replicated, audited, or extended by other researchers.

The polarity weights require explicit justification because they determine how disclosure language is converted into evidence of implementation. Corporate reports describe systems at very different stages of realisation, and treating a stated intention as equivalent to an operating system would bias the index towards firms that write expansively about future plans. The scheme therefore distinguishes three evidential states. A weight of 1.0 is applied where the keyword co-occurs with a verb denoting a completed and operating capability (for example implemented, deployed, integrated, certified, in operation). A weight of 0.6 is applied where the verb denotes partial or in-progress realisation (developed, upgraded, expanded, piloted). A weight of 0.3 is applied where the verb denotes intention, planning, or policy statement without evidence of operation (plan, intend, aim, will, consider). This ordinal structure follows the logic of stage-based maturity models, in which a capability is credited only as it becomes institutionalised (Garbin Praničević et al., 2011; Yazdi et al., 2019), and the specific values were chosen to preserve a clear ordering between the three states while avoiding the information loss that binary coding would impose. Because the values ultimately reflect a judgement, the sensitivity of all reported results to the scheme is tested in Section 3.6 using an alternative 1.0/0.5/0.0 weighting and a purely binary coding.

The extraction engine operates at the sentence and paragraph level rather than on the document as a whole. Each report is converted to plain text, segmented into paragraphs and

sentences, lower-cased, and normalised for punctuation and hyphenation. For every dictionary term the engine first bounds the context to the sentence in which the match occurs (delimited by full stops, semicolons, colons, or bullet markers); where no such boundary is found in one or both directions, an 80-token window centred on the match is used instead. Where more than one qualifying polarity verb occurs within that context, the match is scored as the mean of their weights. To prevent rhetorical repetition from inflating scores, a paragraph-level cap restricts each dictionary term to at most two scored occurrences per paragraph. A length-scaled variant of each dimension score, expressed per 1,000 words of report text, is also computed by the engine; the index used in the structural model is built on the unscaled sums, and the length-scaled variant is reported as a robustness check in Section 4.7 rather than as the primary specification. The current implementation does not yet detect negation or future-conditional qualifiers (for example, “has not yet implemented”), so a keyword co-occurring with a polarity verb inside such a construction is scored at the verb’s ordinary weight; this is acknowledged as a limitation in Section 5.4 and is a priority for the next iteration of the extraction engine.

The four dimension scores are then standardised to zero mean and unit variance across the pooled 440 firm-year observations, and PCA is applied to the standardised matrix. The first principal component is retained as the AIS Maturity Index and is itself reported in standardised form. The index is therefore relative rather than absolute: it has no natural zero point and no theoretical maximum, and a firm's value expresses its distance from the sample average in standard-deviation units rather than a proportion of some ideal state. A value of 0.00 denotes a firm of exactly average technological maturity within the sample; a value of +1.00 denotes a firm one standard deviation above that average. Because the index is a formative composite of the four dimensions rather than a reflective scale, validation proceeds through Variance Inflation Factors and component structure rather than internal-consistency reliability, as set out in Section 3.4.

The complete keyword dictionaries and polarity verb list are reproduced in Appendix A. The Python extraction script and dictionary files are available from the author on request pending deposit in a permanent institutional repository, at which point the DOI will be added to this section.

Control variables comprise Year (coded 1–4 for 2021–2024), Firm Age (years since registration), Firm Size (natural logarithm of total assets), Leverage (total debt to total equity), and Industry (SET

classification coded as in Table 2), accounting for firm characteristics known to influence ESG disclosure and technology adoption. Two further sets of potential alternative explanations are addressed in the extended specifications reported in Section 3.6. Firm financial performance is a plausible common cause of both system investment and ESG rating, since profitable firms can fund discretionary expenditure of either kind; return on assets is therefore added as a control in an extended model. Leadership and board characteristics may likewise drive ESG outcomes independently of the aggregate CG rating; board independence, board gender diversity, CEO board membership, and the presence of a sustainability committee — reported as descriptive indicators in Table 3 — are accordingly entered directly into an extended structural model to establish that the mediation path is not an artefact of these attributes.

Table 2 Industry group coding based on categories from SET

Code	SET Industry Group
1	Industrials (INDUS)
2	Technology (TECH)
3	Property & Construction (PROPCON)
4	Agro & Food Industry (AGRO)
5	Services (SERVICE)
6	Resources (RESOURC)
7	Financials (FINCIAL)
8	Consumer Products (CONSUPM)

3.4 Measurement Validation

AIS Maturity is modelled as a formative index; internal-consistency measures such as Cronbach's alpha are therefore inappropriate. Indicator validity is instead assessed through Variance Inflation Factors (VIF) to confirm non-redundancy among the four dimensions and through PCA to confirm that the indicators jointly capture underlying technological sophistication. Corporate Governance and ESG Performance are treated as reflective institutional indices produced by established external methodologies (IOD and Refinitiv, respectively), whose validity is grounded in the issuing institutions' standardised assessment procedures; additional reliability tests are accordingly not required.

Because the AIS Maturity Index is constructed rather than obtained from an established provider, it is subjected to a separate programme of validation designed to establish that it measures technological capability rather than disclosure verbosity. Four tests are applied. First, discriminant validity against reporting behaviour is assessed by regressing the index on total report length, and by re-estimating the structural model both with report length entered as a control and with the index itself rescaled by report length. Second, known-groups validity is assessed by testing whether the index separates industries in the direction theory predicts, technology-intensive sectors being expected to record systematically higher maturity than sectors with limited information-processing requirements. Third, convergent validity is assessed by substituting an independently produced governance rating for the IOD rating, establishing whether the structural relationships are specific to one rating provider. Fourth, criterion validity is to be assessed by manual coding: a random subsample of firm-year reports would be read independently by trained coders who assign each firm a holistic maturity rating on the four dimensions without sight of the machine-generated score, with agreement reported as a Spearman correlation and inter-coder agreement as Cohen's kappa. The results of the first three tests are reported in Sections 4.3 and 4.7; the manual coding exercise requires primary data collection not completed at the time of this revision and is reported as a priority next step in Section 5.4.

3.5 Statistical Techniques

Preliminary analysis includes descriptive statistics and a Pearson correlation matrix to profile the sample and detect multicollinearity. The structural model is estimated in AMOS version 29 using maximum likelihood, and the mediating effect of AIS Maturity is tested with a bias-corrected bootstrapping procedure of 5,000 resamples, a non-parametric approach that provides robust estimates of indirect effects without normality assumptions (Preacher & Hayes, 2008).

3.6 Robustness Checks and Endogeneity

Because the design is observational, the estimated paths are open to three threats to causal interpretation: reverse causality, whereby firms that already perform well on ESG subsequently attract governance and system investment; omitted variables correlated with both governance quality and technological capability; and correlated reporting behaviour, whereby firms that write extensively

about their systems also write extensively about sustainability and are rewarded accordingly by ESG raters. Four sets of tests address these threats.

First, a lagged specification re-estimates the model with the mediator and the dependent variable measured after the independent variable, using CG in year t, AIS Maturity in year t+1, and ESG performance in year t+2. This ordering imposes the temporal precedence that a mediation claim requires and removes the mechanical simultaneity of the pooled specification, at the cost of reducing the estimation sample to 218 firm-year triads (up to two non-overlapping (t, t+1, t+2) windows per firm within the 2021–2024 period).

Second, because the data form a four-year panel of 110 firms rather than a cross-section, firm-level unobserved heterogeneity is addressed through fixed-effects estimation of the two structural equations, which absorbs all time-invariant firm characteristics including ownership structure, founding conditions, and industry membership. A random-effects specification is estimated for comparison and a Hausman test reported.

Third, an instrumental-variable estimation addresses the possibility that governance quality is itself endogenous. The instrument is the industry-year mean CG score excluding the focal firm, which captures peer and regulatory pressure towards governance conformity while plausibly lacking a direct channel to the focal firm's own ESG performance. Instrument strength is reported as the first-stage F-statistic, and the exclusion restriction is discussed together with its limitations.

Fourth, the sensitivity of the findings to measurement choices is assessed on four fronts. The AIS Maturity Index is recomputed under five alternative treatments of the polarity weights: an alternative 1.0/0.5/0.0 scheme that credits no weight to statements of intention; a purely binary coding in which every keyword match counts equally and polarity is disregarded entirely; a binary coding restricted to matches accompanied by a polarity verb; a rule under which the highest weight in the context governs instead of the mean; and a strict coding under which only matches whose context evidence denotes a completed and operating capability are counted. The influence of report length is assessed by entering the natural logarithm of report length as a control in both structural equations and, separately, by rescaling each dimension score per 1,000 words before the PCA. ESG performance is re-measured using the Refinitiv environmental, social, and governance pillar scores separately, and again using the ESG combined score, which penalises controversies and is therefore

less sensitive to disclosure effort. Governance is re-measured using an independently constructed governance rating and, because the IOD data obtained for this study report only the aggregate composite rating rather than its constituent subscores, the governance channel is decomposed instead across the individual board mechanisms available for the sample — board independence, board gender diversity, CEO board membership, and the presence of a sustainability committee — each entered in place of the composite rating to identify which elements of governance drive the technological channel.

Extended specifications additionally include board independence, board gender diversity, CEO board membership, and the presence of a sustainability committee as controls, addressing the alternative explanation that specific leadership characteristics, rather than governance quality as rated, account for the observed relationships. Return on assets was intended as a further control, but the disclosure and database extracts assembled for this study contain balance-sheet items only — total assets, total debt, total liabilities, and shareholders' equity — and no income-statement series from which a profitability ratio could be constructed; firm size and leverage therefore absorb the resource-capacity channel only in part, and this is reported as a limitation in Section 5.4. Results of all tests are reported in Section 4.7, and the discussion in Section 5 relies only on inferences that survive them.

4. Results and Discussion

4.1 Descriptive Statistics

Table 3 reports descriptive statistics for the 440 firm-year observations. The mean CG score of 4.86 indicates generally strong governance practices among Thai listed firms. The AIS Maturity Index has a mean of 0.00 by construction and a standard deviation of 1.68. The zero mean is a property of the standardisation described in Section 3.3 and carries no substantive interpretation: it does not indicate an absence of AIS capability, but simply locates the sample average at the origin, so that each firm-year value expresses distance from that average in standard-deviation units. The substantive information lies in the dispersion. A standard deviation of 1.68 and a range from –3.14 to 6.34 indicate that Thai listed firms differ very widely in technological sophistication, with a right tail of firms whose systems are far more advanced than those of the median firm. This dispersion is markedly greater than that of the CG score (SD = 0.37 on a five-point scale), confirming that governance quality is far

more uniform across the sample than the technological capability available to implement it — precisely the condition under which a mediating capability can be identified. The mean ESG score of 56.3 reflects moderate sustainability performance. Firms average 27 years of age and moderate size (log assets = 24.43), with an average debt-to-equity ratio of 1.33; boards comprise about 44% independent and 20% female directors, 96% of firms have the CEO serving on the board, and 85% maintain a formal sustainability or CSR committee.

Table 3 Descriptive statistics of study variables (440 firm-year observations)

Variable	Mean	SD	Min	Max	Description
CG Score	4.86	0.37	3.00	5.00	Corporate Governance Rating (IOD) Five-point scale evaluating governance quality of Thai listed firms.
AIS Maturity Index	0.00	1.68	–3.14	6.34	Standardised PCA score representing technological sophistication based on text-mined disclosures.
ESG Score	56.30	16.45	0.19	92.16	Composite ESG performance score from Refinitiv, scaled 0–100.
Firm Age (years)	27.28	15.52	5.00	111.00	Number of years since company establishment.
Firm Size (log assets)	24.43	1.60	21.14	28.87	Natural logarithm of total assets.

Table 4 details the distribution of the AIS Maturity Index, which ranges from –3.14 to 6.34 with skewness and kurtosis within acceptable limits, indicating an approximately normal distribution. Table 5 summarises the PCA loadings: the first principal component explains 71.2% of total variance and all four dimensions load strongly (0.47–0.53), confirming that the four pillars jointly capture the technological dimension of AIS maturity.

Table 3 Descriptive statistics of study variables (440 firm-year observations) (cont.)

Variable	Mean	SD	Min	Max	Description
Leverage (D/E)	1.33	1.61	0.08	23.61	Total-debt-to-equity ratio.
Independent Board Member (%)	44.08	11.16	17.39	77.78	Percentage of independent directors on the board.
Board Gender Diversity (%)	20.27	12.49	0.00	62.50	Percentage of female directors on the board.
CEO as Board Member	96%	20%	0%	100%	Percentage of firms with CEO as Board Member
CSR Sustainability Committee	85%	35%	0%	100%	Percentage of firms with CSR Sustainability Committee
Refinitiv's CG Score	50.14	20.64	0.80	95.71	Corporate governance sub-score from Refinitiv ESG dataset, scaled 0–100.
Note. YEAR_n coded 1–4 representing 2021–2024, respectively. INDUSTRY coded 1–8 following the SET classification: 1 = Industrials, 2 = Technology, 3 = Property & Construction, 4 = Agro & Food, 5 = Services, 6 = Resources, 7 = Financials, 8 = Consumer Products.					

Table 4 Descriptive statistics of the AIS Maturity Index

Statistic	Value	Description
N	440	Firm-year observations (2021–2024)
Mean	0.00	Standardised average (PCA-normalised)
Standard Deviation	1.68	Indicates wide dispersion in AIS sophistication
Minimum	-3.14	Least technologically mature firm
Maximum	6.34	Most technologically mature firm
Skewness	1.07	Near-symmetrical distribution
Kurtosis	0.99	Approximately normal distribution
Variance Explained (PC1)	71.20%	Proportion of variance captured by first principal component

Table 5 PCA loadings of the AIS Maturity dimensions (all years pooled)

AIS Technological Dimension	Loading (PC1)
Core IT Infrastructure	0.52
System Integration	0.48
Data Management & Process Quality	0.53
System & Data Security	0.47
Explained Variance (PC1)	71.20 %

4.2 Correlation Analysis

Table 6 presents the Pearson correlations. CG score correlates positively and significantly with the AIS Maturity Index ($r = .23$, $p < .001$) and the ESG score ($r = .38$, $p < .001$), and AIS Maturity correlates positively with ESG ($r = .40$, $p < .001$), consistent with the proposed mediating role. Larger and older firms exhibit modestly stronger governance and ESG engagement, and the positive

correlations of Year with CG, AIS, and ESG indicate progressive improvement over 2021–2024. No correlation exceeds the 0.80 threshold, indicating no multicollinearity concern.

Table 6 Pearson correlation matrix of study variables (N = 440)

Variable	1	2	3	4	5	6	7	8
1. CG Score	1							
2. AIS Maturity Index	.23***	1						
3. ESG Score	.38***	.40***	1					
4. Firm Size	.20***	.12*	.15**	1				
5. Firm Age	−.03	.08	.12*	.23***	1			
6. Leverage (D/E)	.06	−.02	.14**	.30***	.50***	1		
7. Industry	−.04	−.14**	−.06	−.02	−.26***	−.02	1	
8. Year_n	.22***	.37***	.37***	.30***	.44***	−.04	−.02	1
Note. Values represent Pearson correlation coefficients (two-tailed). p < .05; ** p < .01; *** p < .001.								
Note. YEAR_n coded 1–4 representing 2021–2024, respectively. INDUSTRY coded 1–8 following the SET classification: 1 = Industrials, 2 = Technology, 3 = Property & Construction, 4 = Agro & Food, 5 = Services, 6 = Resources, 7 = Financials, 8 = Consumer Products.								

4.3 Measurement Validation Results

For the formative AIS Maturity construct, all VIF values range between 1.75 and 2.63 (Table 7), well below the conservative threshold of 3.3 (Kock, 2015) and the conventional limit of 5.0 (Hair et al., 2017), confirming that each dimension contributes unique explanatory power. Together with the PCA results in Table 5, these diagnostics affirm that the four technological pillars are valid, distinct formative indicators, as summarised in Table 8. The structural model is just-identified ($\chi^2 = 0$, df = 0); global fit indices such as RMSEA, CFI, and TLI cannot be computed for saturated models, which by definition reproduce the sample covariance matrix exactly (Hair et al., 2017). Model adequacy was therefore assessed through the indicator-level diagnostics above.

Table 7 Variance Inflation Factors (VIF)

Variable	VIF
Core IT Infrastructure	2.38
System Integration	1.88
Advanced Data Management	2.63
System & Data Security	1.75
Note. All VIF values fall below the recommended threshold of 3.3 (Kock, 2015), confirming the absence of multicollinearity among indicators.	

The validation programme specified in Section 3.4 returns three completed results and one outstanding item. On discriminant validity, regressing the index on total report length shows that length is a positive and statistically significant correlate of the index ($r = .458$, $p < .001$) but explains only 21.0% of its variance ($R^2 = .210$, $N = 438$). The index is therefore not principally a reflection of disclosure volume, although the association is substantial enough that the structural model is re-estimated in Section 4.7 both with report length controlled and with the index rescaled by length. On known-groups validity, the index separates industries in the direction theory predicts: mean maturity is highest in Technology ($M = 1.18$) and lowest in Agro and Food ($M = -0.54$), with Resources and Property and Construction occupying intermediate positions, and the difference across the seven SET industry groups is significant ($F = 7.42$, $p < .001$), industry alone accounting for 9.3% of the variance in the index. The contrast between the most and least information-intensive groups is large by conventional standards (Cohen's $d = 1.13$). On convergent validity, substituting an independently produced governance rating for the IOD rating reproduces the mediation result (Section 4.7), indicating that the structural relationships are not an artefact of one rating provider's methodology. Manual coding for criterion validity has not yet been undertaken and is reported as a priority next step in Section 5.4. Taken together, the completed tests support interpreting the index as a measure of technological capability rather than of reporting volume, subject to the length-sensitivity qualification quantified in Section 4.7.

Table 8 Construct validation and measurement model summary

Construct	Type	Validation Criteria	Result
CG Score	Reflective	External reliability	Valid
ESG Score	Reflective	External reliability	Valid
AIS Maturity	Formative	VIF < 3.3, PC1 = 71.2%	Valid

4.4 Structural Model and Mediation Analysis

The structural model specifies three primary paths — CG ⟶ ESG, CG ⟶ AIS, and AIS ⟶ ESG — with the mediation effect evaluated through the indirect pathway CG ⟶ AIS ⟶ ESG, controlling for firm size, firm age, leverage, industry, and year. The model was estimated by maximum likelihood with bias-corrected bootstrapping (5,000 resamples). Figure 2 displays the standardised estimates.

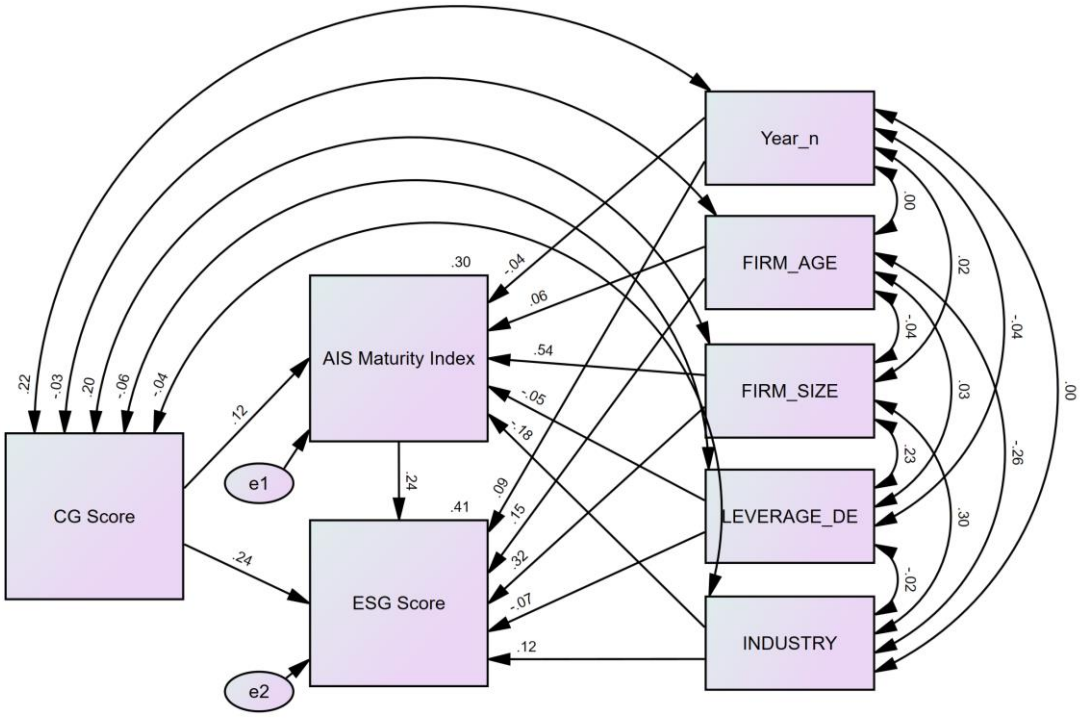

Figure 2 Structural model with standardised estimates (AMOS)

Note. Path coefficients are reported to three decimal places throughout the text and in Tables 9 to 12; where the figure displays two-decimal values, these are rounded representations of the same AMOS estimates and involve no difference in the underlying results.

As shown in Table 9, Corporate Governance has a positive and significant effect on AIS Maturity (β = 0.123, $p < 0.05$), supporting H2. Firms with stronger governance are more likely to invest in advanced digital infrastructure: effective boards and oversight committees create a culture of accountability that encourages the adoption of integrated, reliable, and secure systems. From the RBV perspective, governance functions as an organisational capability that mobilises resources toward technological innovation, consistent with evidence that well-governed organisations deploy advanced IT to strengthen internal control and sustainability management (Buchetti et al., 2025; Hentati & Boulila, 2024; Yazdi et al., 2019).

AIS Maturity exerts a positive and highly significant effect on ESG Performance (β = 0.239, $p < 0.001$), supporting H3. A mature AIS enables systematic collection, integration, and analysis of large datasets, improving the accuracy, reliability, and timeliness of ESG reporting. Consistent with TTF theory, alignment between technological capability and the information-intensive demands of ESG management improves reporting efficiency and decision quality, transforming compliance from a regulatory burden into a strategic capability (Goodhue & Thompson, 1995; Hentati & Boulila, 2024; Liu, 2023).

The direct path from Corporate Governance to ESG Performance also remains positive and significant (β = 0.239, $p < 0.01$), supporting H1. Governance quality thus drives sustainability outcomes beyond its technological influence, reflecting cultural and managerial dimensions such as tone at the top, ethical leadership, and stakeholder orientation that operate regardless of system sophistication (Buchetti et al., 2025).

Table 9 Standardised path coefficients of the structural model

Structural Path	Hypothesis	Std. Estimate (β)	p-value	Result
CG ⟶ AIS Maturity	H2	0.123	< 0.05	Supported
AIS Maturity ⟶ ESG Performance	H3	0.239	< 0.001	Supported
CG ⟶ ESG Performance	H1	0.239	< 0.01	Supported

The bootstrapped mediation test (Table 10) shows that the indirect effect of CG on ESG through AIS Maturity is positive and significant (β = 0.030, 95% CI [0.010, 0.070]), while the direct effect remains significant and the total effect (β = 0.268) exceeds the indirect component, confirming partial rather than full mediation and supporting H4. AIS Maturity thus functions as an enabling mechanism that translates governance structures into improved data quality, transparency, and reporting efficiency. The partial nature of the mediation indicates that complementary mechanisms including, leadership commitment, corporate culture, and stakeholder engagement, also transmit governance effects to sustainability outcomes; technological capability strengthens, but does not substitute for, governance.

The size and form of this mediation merit closer interpretation. The indirect effect of 0.030 represents approximately 11% of the total effect of 0.268, so while the technological channel is statistically robust, the greater part of the governance effect reaches ESG performance by other routes. This pattern refines rather than contradicts the prior literature. Studies treating information systems as mediators have generally also reported partial mediation: Alawaqleh (2021) found AIS to transmit only part of the internal-control effect on employee performance, and Hu and Song (2024) report that transparency and innovation channels carry a portion, not the whole, of the digital-transformation effect on ESG performance. What the present study adds is evidence that the same partial structure holds when governance is captured by an externally validated institutional rating rather than a perceptual survey, and when the mediator is derived from disclosure text rather than self-report.

Three contextual factors account for the modest magnitude of the indirect path in this setting. First, the governance measure is compressed: with a mean of 4.86 on a five-point scale and a standard deviation of 0.37, most sample firms cluster in the upper bands, which mechanically limits the variance available to propagate through the mediator. Second, the IOD rating assesses governance structure, transparency, and risk practice rather than technology investment directly, so its influence on system maturity is indirect and is likely to operate over horizons longer than the annual observation window — a proposition tested by the lagged specification described in Section 3.6. Third, the non-technological transmission channels are substantial in an emerging-market context: where assurance markets and ESG data infrastructure are still developing, board commitment, executive

tone, and direct stakeholder engagement carry weight that systems alone cannot, which is why full mediation would have been the more surprising finding.

Partial mediation therefore conveys a substantive message rather than signalling a weak model. Technological capability is a necessary conduit but not a sufficient one: firms cannot digitalise their way to ESG performance in the absence of governance commitment, and governance commitment is in turn constrained in what it can deliver where systems cannot produce reliable, auditable non-financial data.

Table 10 Direct, indirect, and total effects (bootstrapping results, N = 5,000)

Path	Effect Type	Std. Estimate (β)	95% Confidence Interval	Result
CG ⟶ ESG	Direct	0.239	[0.120, 0.410]	Significant
CG ⟶ AIS ⟶ ESG	Indirect	0.030	[0.010, 0.070]	Significant
CG ⟶ ESG (Total)	Total	0.268	–	–

Note. Estimates are standardised coefficients derived from AMOS v29 using Maximum Likelihood estimation with 5,000 bias-corrected bootstrap samples. Significance is established where the 95% confidence interval does not include zero.

4.5 Control Variables

Table 11 reports the effects of the control variables. Firm size exerts the strongest significant positive effect on both AIS Maturity (β = 0.539) and ESG Performance (β = 0.325), implying that larger firms possess more advanced infrastructures and greater resources for sustainability reporting. Firm age shows small positive but statistically weak associations, leverage displays weak negative relationships consistent with debt pressure constraining non-financial investment, industry shows a moderate negative effect on AIS Maturity only, and year effects are small. Overall, firm size is the most consistent contextual factor, while the mediation structure remains robust across firm characteristics.

Table 11 Effects of control variables on AIS Maturity and ESG Performance

Control Variable	Effect on AIS Maturity (β)	Effect on ESG Performance (β)	Interpretation
Year_n (2021–2024)	–0.041 (ns)	0.087 (ns)	Slight upward ESG trend over time, not statistically significant.
Firm Age	0.055 (ns)	0.149 (ns)	Older firms show slightly greater ESG maturity but not statistically strong.
Firm Size	0.539 (**positive, significant**)	0.325 (**positive, significant**)	Larger firms possess more resources and adopt more advanced systems.
Leverage (D/E)	–0.052 (ns)	–0.071 (ns)	Financially leveraged firms tend to invest less in AIS and ESG.
Industry	–0.175 (**negative**)	0.117 (ns)	Industry influences technological intensity but not ESG engagement.
Note. ns = non-significant at p > 0.05. Standardised coefficients are derived from AMOS v29 (SEM Maximum Likelihood estimation).			

4.6 Summary of Hypothesis Testing

Table 12 summarises the hypothesis tests. All four hypotheses are supported in the primary specification: governance is associated with stronger ESG outcomes directly and operates through the technological channel of AIS maturity, which partially mediates the CG–ESG relationship. Section 4.7 then establishes the range of specifications over which this conclusion holds and identifies the two under which the indirect path does not survive.

4.7 Robustness Checks and Endogeneity Results

The tests specified in Section 3.6 were conducted to establish whether the mediation result is robust to specification, measurement, and identification concerns. Their outcomes are reported below.

Temporal ordering. In the lagged specification (CG in year t, AIS Maturity in year t+1, ESG performance in year t+2; N = 218 firm-year triads), the CG to AIS path is b = 0.166 (p = .005), the AIS to ESG path is b = 0.194 (p = .005), and the indirect effect is b = 0.032 with a 95% bootstrap confidence

interval of [0.006, 0.063] (5,000 resamples). Imposing temporal precedence therefore preserves, and if anything marginally strengthens, the mediation obtained in the pooled specification, with both constituent paths remaining significant at $p < .01$.

Table 12 Summary of hypothesis testing results

Hypo.	Structural Path	Std. Estimate (β)	p-value / 95% CI	Result
H1	CG ⟶ ESG Performance	0.239	$p < 0.01$	Supported
H2	CG ⟶ AIS Maturity	0.123	$p < 0.05$	Supported
H3	AIS Maturity ⟶ ESG Performance	0.239	$p < 0.001$	Supported
H4	CG ⟶ AIS Maturity ⟶ ESG (Mediation)	0.030 (95% CI [0.010, 0.070])	–	**Partial Mediation Supported**
Note. Estimates are standardised coefficients derived from AMOS v29 using Maximum Likelihood estimation and bootstrapping (5,000 resamples). Significance is established where the 95% confidence interval does not include zero.				

Panel estimation. Entity fixed-effects estimation of the two structural equations, with firm-clustered standard errors and absorbing all time-invariant firm characteristics (including Firm Age and Industry, which are collinear with the firm effect), yields a CG to AIS coefficient of b = 0.021 (p = .488) and an AIS to ESG coefficient of b = 0.004 (p = .961); neither path remains significant, and the implied indirect effect is negligible (b ≈ 0.000). A random-effects specification produces a CG to AIS coefficient of b = 0.040 (p = .211) and an AIS to ESG coefficient of b = 0.087 (p = .054). Hausman tests do not reject the random-effects specification for either equation (AIS equation: p = 1.000; ESG equation: χ^2 = 6.44, p = .266), so the statistical evidence does not by itself favour fixed effects. Substantively, however, the attenuation of both paths to non-significance once firm-level heterogeneity is absorbed is consistent with a meaningful part of the pooled association reflecting stable between-firm differences — governance quality and technological maturity that are largely fixed characteristics of a firm over a four-year window — rather than within-firm change in governance driving within-firm change in systems and performance. This is reported as a genuine limitation on the causal

interpretation of the pooled result, not one explained away by the non-rejection of the Hausman test.

Instrumental variables. Using the industry-year mean CG score excluding the focal firm as an instrument (N = 435; four singleton industry-year cells without a valid leave-one-out mean were dropped), the first-stage partial F-statistic is 3.79 (p = .052), which is below the conventional weak-instrument threshold of 10. The second-stage CG to ESG coefficient is b = -0.474 (p = .403), which is not interpretable as a causal estimate given the weak first stage; the sign reversal relative to the OLS estimate is itself a symptom of weak-instrument bias rather than a substantive finding. This result is consistent with the compressed variance of the CG score documented in Section 4.1 (SD = 0.37 on a five-point scale): because governance ratings cluster tightly within industry-year cells, the leave-one-out industry-year mean carries too little independent variation to identify the CG to ESG path convincingly. The exclusion restriction is, in any case, defended only on the ground that peer governance conformity affects the focal firm's ESG performance solely through its own governance practices, an assumption that cannot be tested directly; both the weak instrument and the untestable exclusion restriction are acknowledged as limitations in Section 5.4, and the IV estimate is not relied upon in the discussion in Section 5.

Measurement robustness: polarity weighting. The AIS Maturity Index was recomputed from the keyword-level match data under five alternative treatments of the polarity weights and the structural model re-estimated in each case (Table 13). The index is highly stable: correlations with the published index range from .834 to .985, and the first principal component continues to account for between 53% and 75% of the variance in the four dimension scores. The mediation result holds throughout. Under the alternative 1.0/0.5/0.0 scheme, which credits no weight to statements of intention, the paths are almost unchanged (a = 0.120, p = .005; b = 0.247, p < .001; indirect = 0.030). Under a purely binary coding that disregards polarity entirely, the governance path weakens but remains significant (a = 0.088, p = .034) while the capability path strengthens (b = 0.275, p < .001), giving an indirect effect of 0.024. Under a strict coding counting only evidence of completed and operating capability, the indirect effect is 0.025 (a = 0.100, p = .032; b = 0.254, p < .001). Substituting the highest observed weight for the mean yields an indirect effect of 0.027. No alternative weighting overturns the finding, and the fact that even complete removal of the polarity scheme leaves the mediation intact indicates

that the result rests on the presence of the technological vocabulary itself rather than on the particular calibration of the weights.

Measurement robustness: report length. Because the dimension scores entering the PCA are sums of weighted matches, the index is mechanically sensitive to the length of the report from which it is extracted, and the correlation of .458 reported in Section 4.3 is material. Two corrections were applied. Entering the natural logarithm of report length as a control in both structural equations attenuates the indirect effect from 0.030 to 0.017 but leaves it significant (95% bootstrap CI [0.004, 0.035]; a = 0.081, p = .045; b = 0.215, p < .001). Rescaling each dimension score per 1,000 words before the PCA is a more severe correction: the resulting index is essentially free of the length association (r = −.176, against .458 for the unscaled index), the capability path remains significant (b = 0.136, p < .001), but the governance path falls to non-significance (a = 0.070, p = .139) and the indirect effect declines to 0.010 with a 95% confidence interval of [−0.001, 0.024] that marginally includes zero. The two corrections bracket the finding rather than settle it. The association between AIS maturity and ESG performance is robust to either treatment; the association between governance and AIS maturity is not robust to full length-scaling, so the mediation claim holds under length control but not under length-scaling. Since dividing by total report length also removes genuine signal — a firm operating more systems has more to describe, and total report length is driven substantially by financial and governance sections unrelated to technology — neither specification is unambiguously preferable, and the result is therefore reported in both forms and carried into the limitations in Section 5.4.

Alternative ESG measures. The mediation is reproduced with every alternative outcome measure available (Table 14). Replacing the composite ESG score with the controversy-adjusted ESG combined score, which penalises firms for adverse events and is therefore less responsive to disclosure effort, gives an indirect effect of 0.030 (95% CI [0.013, 0.052]). Estimated separately on the environmental pillar the indirect effect is 0.023 (95% CI [0.009, 0.042]), on the social pillar 0.027 (95% CI [0.011, 0.048]), and on the governance pillar 0.019 (95% CI [0.005, 0.037]). All three pillars and the controversy-adjusted measure therefore return a significant technological channel, with the environmental and social pillars — the components least mechanically related to the governance predictor — behaving much as the composite does. The pillar scores were drawn from a data extract

dated 24 October 2025, marginally earlier than the 29 October 2025 extract supplying the primary ESG series; the two vintages agree closely on the common composite score (mean absolute difference 0.39 points on a 100-point scale), and the small number of firms restated between vintages does not affect the pattern reported here.

Governance measurement and mechanism decomposition. The IOD Corporate Governance Report obtained for this study publishes only the aggregate composite rating, so the intended decomposition into board structure, shareholder rights, disclosure and transparency, and risk-management subscores could not be performed; this remains outstanding and is noted in Section 5.4. Two substitutes were therefore estimated. First, replacing the IOD rating with an independently produced governance rating reproduces the mediation (a = 0.124, p = .006; b = 0.183, p < .001; indirect = 0.023, 95% CI [0.007, 0.041]), establishing that the result is not specific to the IOD methodology. Second, each individual board mechanism was entered in place of the composite rating (Table 14). The technological channel is carried by institutionalised governance rather than by board composition: the presence of a sustainability committee produces a significant indirect effect (a = 0.108, p = .024; indirect = 0.025, 95% CI [0.007, 0.046]), whereas board independence (a = 0.046, n.s.), board gender diversity (a = 0.055, n.s.), and CEO board membership (a = 0.027, n.s.) each fail to predict AIS maturity and yield indirect effects whose confidence intervals include zero. The capability path to ESG performance remains significant at p < .001 in every one of these specifications. The reading this supports is that what mobilises technological investment is the existence of a standing board-level structure charged with sustainability oversight, together with the aggregate governance quality that external raters certify, rather than the demographic composition of the board considered on its own.

Extended controls. In an extended model additionally controlling for board independence, board gender diversity, CEO board membership, and the presence of a sustainability committee (N = 344; reduced from 440 owing to missing CEO-board-membership records for some firm-years), the CG to AIS path attenuates to non-significance (b = 0.071, p = .180), the AIS to ESG path remains significant (b = 0.232, p < .001), and the direct CG to ESG path remains significant but attenuates (b = 0.196, p < .001). The indirect effect attenuates to b = 0.016, with a 95% bootstrap confidence interval of [−0.001, 0.037] that marginally includes zero. Of the added controls, only the presence of a sustainability

committee is itself a significant predictor of ESG performance (b = 0.205, p < .001), consistent with the mechanism decomposition reported above. The mediation path therefore survives the inclusion of these leadership characteristics in direction and magnitude but no longer clears conventional significance thresholds at the 95% level in this smaller subsample, a qualification carried into the discussion in Section 5.

Table 13 AIS Maturity Index and structural paths under alternative polarity-weighting schemes

Weighting scheme	PC1 variance	r with primary	CG ⟶ AIS (a)	AIS ⟶ ESG (b)	Indirect
Primary: 1.0 / 0.6 / 0.3, mean of matched verbs	71.2%	1.000	0.119**	0.245***	0.029
Alternative 1.0 / 0.5 / 0.0, intention uncredited	69.8%	.983	0.120**	0.247***	0.030
Binary: every keyword match counts equally	74.9%	.911	0.088*	0.275***	0.024
Binary: polarity verb required	72.8%	.974	0.117**	0.237***	0.028
Highest weight in context governs	71.5%	.981	0.117**	0.232***	0.027
Strict: completed capability only	53.3%	.834	0.100*	0.254***	0.025

Note. Each index was recomputed from the keyword-level match data and re-standardised through pooled PCA. Paths are standardised coefficients estimated with the full control set. * p < .05, ** p < .01, *** p < .001.

Table 14 Mediation results under alternative ESG outcome and governance measures

Specification	N	CG ⟶ AIS (a)	AIS ⟶ ESG (b)	Direct (c′)	Indirect	95% CI
Panel A: alternative ESG outcome measures						
ESG score (primary)	439	0.122**	0.239***	0.238***	0.029	[0.013, 0.049]
ESG combined score	431	0.116**	0.259***	0.257***	0.030	[0.013, 0.052]
Environmental pillar	431	0.116**	0.196***	0.205***	0.023	[0.009, 0.042]
Social pillar	431	0.116**	0.230***	0.225***	0.027	[0.011, 0.048]
Governance pillar	431	0.116**	0.163**	0.201***	0.019	[0.005, 0.037]
Panel B: alternative governance measures						
IOD composite rating (primary)	439	0.122**	0.239***	0.238***	0.029	[0.013, 0.049]
Independent governance rating	439	0.124**	0.183***	0.545***	0.023	[0.007, 0.041]
Sustainability committee	439	0.108*	0.232***	0.312***	0.025	[0.007, 0.046]
Board independence	439	0.046	0.275***	0.002	0.013	[−0.008, 0.035]
Board gender diversity	439	0.055	0.280***	−0.078	0.015	[−0.008, 0.041]
CEO board membership	344	0.027	0.298***	−0.013	0.008	[−0.005, 0.023]

Note. Standardised coefficients with the full control set; confidence intervals from bootstrap resamples. Pillar and combined scores derive from a 24 October 2025 extract, which differs from the primary series by a mean absolute 0.39 points on the common composite score. * $p < .05$, ** $p < .01$, *** $p < .001$.

5. Conclusions and Recommendations

5.1 Conclusion

This study examined the mediating role of AIS Maturity in the relationship between Corporate Governance and ESG performance among Thai listed firms, using automated text-mining to construct the AIS Maturity Index and SEM with bootstrapped mediation tests on 440 firm-year observations. The

findings show that Corporate Governance is positively associated with both AIS Maturity and ESG Performance, that AIS Maturity is positively associated with ESG outcomes, and that AIS Maturity partially mediates the CG–ESG relationship. The robustness programme in Section 4.7 establishes the boundaries within which these conclusions hold. The mediation is unaffected by the calibration of the polarity weights, by the choice among the environmental, social, governance, and controversy-adjusted ESG measures, by the substitution of an independently produced governance rating, and by the imposition of temporal precedence through a lagged specification. It attenuates to marginal significance once board characteristics are added in the smaller subsample for which they are available, and it does not survive either the absorption of firm fixed effects or the full rescaling of the index by report length. The relationship between AIS maturity and ESG performance is the more durable of the two constituent paths, remaining significant in every specification except the fixed-effects model; the governance-to-technology path is the more fragile. The appropriate reading is therefore that effective governance is associated with the technological readiness that underpins data reliability, transparency, and ESG reporting quality — governance providing strategic direction and accountability, and AIS maturity the technological foundation that operationalises those goals — while the evidence assembled here identifies a robust conditional association rather than establishing the direction of causation between them.

These results carry relevance for firms and regulators in developing markets. In such economies governance reform has generally advanced faster than digital capability: codes, ratings, and disclosure mandates can be adopted comparatively quickly, whereas integrated systems, disciplined data management, and information security accumulate slowly and unevenly. The present findings indicate that this asymmetry has a measurable cost. Where the technological base is thin, part of the intended effect of governance reform does not reach sustainability outcomes, and firms may satisfy governance criteria while remaining unable to generate ESG data of assurable quality. Three implications follow. For firms in comparable markets — Indonesia, Malaysia, Vietnam, the Philippines, and the wider ASEAN region, whose reporting ecosystems exhibit similar dispersion (Pratama et al., 2022, 2024) — investment in accounting information systems is better understood as part of the governance agenda than as separate information-technology expenditure. For regulators, mandating disclosure without supporting the data infrastructure that makes disclosure reliable risks producing compliance rather than performance, so capability-building measures merit a place alongside reporting requirements.

For international investors and rating agencies, the wide dispersion of AIS maturity documented here implies that ESG scores originating in developing markets carry heterogeneous data quality behind numerically comparable values, and that indicators of system maturity offer one means of distinguishing them. The generalisability of these implications beyond Thailand nevertheless requires direct testing in other emerging markets, as noted in Section 5.5.

5.2 Theoretical Implications

The findings extend the Resource-Based View by demonstrating that a technologically mature AIS functions as a valuable, rare, and difficult-to-imitate strategic resource (Barney, 1991), and that governance quality acts as a dynamic enabler mobilising resource toward digital capability building. The effectiveness of governance is realised when supported by sophisticated information systems that convert oversight into measurable, sustained performance advantages. The study also extends the Task–Technology Fit framework into the domain of corporate sustainability: the significant AIS–ESG relationship confirms that performance is optimised when technological characteristics match the requirements of complex ESG data collection, tracking, and disclosure tasks (Goodhue & Thompson, 1995).

The study further advances the AIS maturity literature by introducing a technology-focused operationalisation of the construct and a replicable text-mining measurement that overcomes the limitations of survey-based, perceptual assessment (Yazdi et al., 2019). For corporate governance theory, the positive CG–AIS relationship positions governance as a strategic enabler of digital transformation, suggesting that in the digital era board oversight and IT alignment are mutually reinforcing. Integrating these perspectives, the study proposes a Governance–Technology–Sustainability Nexus in which Corporate Governance fosters technological capability building and AIS Maturity serves as the technological conduit transforming governance intent into measurable ESG outcomes — a framework for understanding digitally enabled governance and long-term value creation.

5.3 Practical Implications

For executives, the results indicate that technological capability should be treated as a strategic extension of governance effectiveness: boards should promote investment in integrated accounting and information systems, foster cross-functional collaboration among IT, accounting, and sustainability

functions, and embed digital governance principles into corporate policy. For regulators and policymakers, including the SET, the SEC, and the IOD, the demonstrated CG–AIS–ESG linkage supports incorporating digital-capability indicators into governance rating systems, encouraging or mandating digital ESG reporting platforms that facilitate real-time data submission and benchmarking, offering incentive mechanisms such as digital innovation grants or ESG disclosure awards, and issuing guidance on AIS-based ESG data assurance, in line with international initiatives such as IFRS S1–S2 and the GRI Standards. For auditors and consultants, technological infrastructure should be assessed as a determinant of reporting reliability, extending assurance procedures beyond traditional financial controls to system integration, data management quality, and cybersecurity robustness. For investors and rating agencies, AIS maturity offers a signal of governance quality and disclosure reliability that reduces information asymmetry and can be integrated into ESG valuation and due-diligence frameworks.

Beyond these stakeholder-specific implications, the text-mining-based measurement of AIS Maturity offers a replicable and scalable benchmarking framework. By quantifying the presence and strength of AIS-related disclosures, the index enables organisations to identify their position relative to industry peers, monitor progress over time, and pinpoint dimensions — such as integration or data security — requiring further investment, serving both as a diagnostic indicator of digital capability and as a strategic benchmark for continuous improvement.

5.4 Limitations

Seven limitations should be acknowledged. First, although the text-mining procedure improves objectivity and scalability through refined dictionaries, contextual verb weighting, and regex matching, it cannot fully replicate human interpretation of narrative disclosure; in particular, the current implementation does not detect negation or future-conditional qualifiers (for example, “has not yet implemented”), so a small number of matches may be scored as though a capability were in place when the surrounding text in fact denies or defers it. Correcting this is the first priority for the next iteration of the engine, although the weighting-scheme robustness reported in Section 4.7 suggests the consequences for the structural estimates are likely to be modest. Second, the AIS Maturity Index is constructed from disclosure text and so measures capability as reported rather than as installed. The validation programme in Sections 3.4 and 4.3 establishes that the index is not principally a

function of report length, that it separates industries in the theoretically expected direction, and that the structural result is not specific to one governance rating provider; criterion validation by independent manual coding, however, has not yet been undertaken and remains the most important outstanding validation of the measure. Third, and relatedly, the index is built on unscaled sums of weighted matches and is therefore sensitive to report length: the mediation survives entering report length as a control but not full rescaling of the index per 1,000 words, under which the governance-to-technology path loses significance. Readers should treat the magnitude of the technological channel as bounded by these two specifications rather than as a single point estimate. Fourth, the AIS Maturity Index deliberately captures only the technological dimension of a broader socio-technical system, omitting human expertise, managerial support, and organisational culture, which are proxied only indirectly through the governance construct. Fifth, causal identification remains incomplete in more than the usual sense: the fixed-effects estimates in Section 4.7 attenuate both structural paths to non-significance, and the instrumental-variable estimate is undermined by a weak first stage (F = 3.79) and by an exclusion restriction that cannot be tested directly, so the pooled result is best read as a robust conditional association that partially reflects stable between-firm differences. Sixth, two data constraints could not be relieved within this revision: the IOD Corporate Governance Report obtained for the study publishes only the aggregate composite rating, preventing decomposition into its governance subcomponents — addressed only partially through the board-mechanism decomposition in Section 4.7 — and the database extracts contain no income-statement series, so firm profitability could not be entered as a control and the resource-capacity channel is absorbed only in part by firm size and leverage. Seventh, the findings are contextualised to Thai non-financial listed firms rated above the IOD disclosure threshold, aggregated third-party scores may obscure firm-specific variation, and the just-identified structural model precludes evaluation of conventional global fit indices, although indicator-level diagnostics support the specification.

5.5 Future Research

Future studies could expand the AIS Maturity construct to incorporate human, managerial, and organisational dimensions; apply advanced natural language processing and machine learning to improve the contextual sensitivity of text-based measurement, complemented by qualitative validation; and adopt longitudinal or panel designs, broader sectors, and cross-country comparisons to strengthen causal inference and external validity. Exploring additional mediators or moderators —

such as digital transformation readiness, data governance quality, or board IT expertise — and complementary lenses such as Institutional Theory and Dynamic Capabilities Theory, as well as emerging technologies including artificial intelligence and blockchain, would further develop the governance–technology–sustainability nexus proposed in this study.

References

Adardour, Z., Ed-Dafali, S., Mohiuddin, M., El Mortagi, O., Sbai, H., & Bouzahir, B. (2025). Exploring the drivers of environmental, social, and governance (ESG) disclosure in an emerging market context using a mixed methods approach. *Future Business Journal*, *11*(1), 107. https://doi.org/10.1186/s43093-025-00530-w

Alawaqleh, Q. A. (2021). The effect of internal control on employee performance of small and medium-sized enterprises in Jordan: The role of accounting information system. *The Journal of Asian Finance, Economics and Business*, *8*(3), 855–863. https://doi.org/10.13106/JAFEB.2021.VOL8.NO3.0855

Amel-Zadeh, A., & Serafeim, G. (2018). Why and how investors use ESG information: Evidence from a global survey. *Financial Analysts Journal*, *74*(3), 87–103. https://doi.org/10.2469/faj.v74.n3.2

Bachmid, F. S. (2016). The effect of accounting information system quality on accounting information quality. *Research Journal of Finance and Accounting*, *7*(20), 26–31.

Barney, J. (1991). Firm resources and sustained competitive advantage. *Journal of Management*, *17*(1), 99–120. https://doi.org/10.1177/014920639101700108

Bourgeois, D. T. (2014). *Information systems for business and beyond*. Saylor Academy.

Buchetti, B., Arduino, F. R., & Perdichizzi, S. (2025). A literature review on corporate governance and ESG research: Emerging trends and future directions. *International Review of Financial Analysis*, *97*, 103759. https://doi.org/10.1016/j.irfa.2024.103759

Donaldson, T., & Preston, L. E. (1995). The stakeholder theory of the corporation: Concepts, evidence, and implications. *Academy of Management Review*, *20*(1), 65–91. https://doi.org/10.2307/258887

Garbin Praničević, D., Alfirević, N., & Indihar Štemberger, M. (2011). Information system maturity and the hospitality enterprise performance. *Economic and Business Review*, *13*(4). https://doi.org/10.15458/2335-4216.1225

Goodhue, D. L., & Thompson, R. L. (1995). Task-technology fit and individual performance. *MIS Quarterly*, *19*(2), 213–236. https://doi.org/10.2307/249689

Hair, J. F., Hult, G. T. M., Ringle, C. M., & Sarstedt, M. (2017). *A primer on partial least squares structural equation modeling (PLS-SEM)* (2nd ed.). SAGE.

Hentati, H., & Boulila, N. (2024). Digital maturity index for accounting firms. *Journal of Accounting & Organizational Change*, *20*(4), 748–772. https://doi.org/10.1108/JAOC-09-2022-0139

Hu, H., & Song, Y. (2024). How digital transformation enables corporate ESG performance in the context of big data: A research review and outlook. *2024 9th International Conference on Intelligent Informatics and Biomedical Sciences (ICIIBMS)*, 263–267. https://doi.org/10.1109/ICIIBMS62405.2024.10792874

Jensen, M. C., & Meckling, W. H. (1976). Theory of the firm: Managerial behavior, agency costs and ownership structure. *Journal of Financial Economics*, *3*(4), 305–360. https://doi.org/10.1016/0304-405X(76)90026-X

Kock, N. (2015). Common method bias in PLS-SEM: A full collinearity assessment approach. *International Journal of e-Collaboration*, *11*(4), 1–10. https://doi.org/10.4018/ijec.2015100101

Lagasio, V., & Cucari, N. (2019). Corporate governance and environmental social governance disclosure: A meta-analytical review. *Corporate Social Responsibility and Environmental Management*, *26*(4), 701–711. https://doi.org/10.1002/csr.1716

Liu, X. (2023). Corporate ESG performance and accounting information quality. *Transactions on Economics, Business and Management Research*, *3*, 229–244. https://doi.org/10.62051/pr6x9r17

Mkadmi, J. E., & Daafous, W. (2025). Does corporate governance affect the environmental, social and governance disclosure? A cross-country study. *Central European Management Journal*, *33*(2), 265–285. https://doi.org/10.1108/CEMJ-10-2023-0406

Moffitt, J. S., Patin, J.-C. A., & Watson, L. (2024). Corporate environmental, social, and governance (ESG) performance and the internal control environment. *Accounting Horizons*, *38*(3), 103–124. https://doi.org/10.2308/HORIZONS-2020-172

Pratama, A., Dewi, N., Sofia, P., Muhammad, K., & Megawati, L. R. (2024). Sustainability reporting ecosystem and IFRS S1 and S2: How accounting research can assist its implementation. *Journal of Ecohumanism*, *3*(4), 3101–3129. https://doi.org/10.62754/joe.v3i4.3830

Pratama, A., Jaenudin, E., & Anas, S. (2022). Environmental, social, governance - sustainability disclosure using International Financial Reporting Sustainability Standards S1 in Southeast Asian companies: A preliminary assessment. *International Journal of Energy Economics and Policy*, *12*(6), 456–472. https://doi.org/10.32479/ijeep.13581

Preacher, K. J., & Hayes, A. F. (2008). Asymptotic and resampling strategies for assessing and comparing indirect effects in multiple mediator models. *Behavior Research Methods*, *40*(3), 879–891. https://doi.org/10.3758/BRM.40.3.879

Qin, Z. (2024). Study on the impact of ESG performance on corporate information transparency. *Modern Economics & Management Forum*, *5*(5), 777. https://doi.org/10.32629/memf.v5i5.2608

Umar, U. H., Firmansyah, E. A., Danlami, M. R., & Al-Faryan, M. A. S. (2024). Revisiting the relationship between corporate governance mechanisms and ESG disclosures in Saudi Arabia. *Journal of Accounting & Organizational Change*, *20*(4), 724–747. https://doi.org/10.1108/JAOC-01-2023-0011

Wijayanti, P., Mohamed, I. S., & Daud, D. (2024). Computerized accounting information systems: An application of task technology fit model for microfinance. *International Journal of Information Management Data Insights*, *4*(1), 100224. https://doi.org/10.1016/j.jjimei.2024.100224

Yazdi, H., Ghanbari, M., Navid, B. J., & Javanmard, H. (2019). Identification and categorization of effective factors and indices in measuring the maturity of accounting information system. *International Journal of Finance and Managerial Accounting*, *4*(15), 13–24.

Zhang, C., & Wang, Y. (2024). Are ESG scores affected by the quality of non-financial disclosures? *International Review of Economics & Finance*, *93*, 1431–1458. https://doi.org/10.1016/j.iref.2024.03.070

Appendix A: Keyword Dictionaries and Polarity Verb List for the AIS Maturity Index

Table A1 reports the 333 active keyword terms applied to each of the four technological dimensions of the AIS Maturity Index, and Table A2 reports the 84 active contextual polarity verbs and their weights. Terms are matched case-insensitively; singular, plural, hyphenated, and common abbreviated forms are resolved by regular expression. A keyword is scored only where a polarity verb occurs within its context, and each term is scored at most twice per paragraph.

Table A1 Keyword dictionary by AIS technological dimension

Core IT (85 terms)

5G network, Access Control, Accounting Information System, Accounting Software, AI and full automation, API, Application System, Artificial Intelligence (AI), Audit Software, Autonomous network, Backup data center, Big Data, Blockchain, Business Continuity drills, Business Continuity Management System (ISO 22301), Centralized Database, Client-server technology, Cloud Computing, Cloud SOC, Cloud System, Cloud-based systems, Continuous Auditing, Customer Application Platform, Dashboard, Data Acquisition Architectures, Data Aggregation, Data center, Data Center Operations, Data Integrity, Data Processing, Data Storage, Data Warehouses, Database, Digital Platforms, Enterprise Resource Planning (ERP), ERP Vendors (Oracle), ERP Vendors (SAP), Fiber optic network, Financial Reporting Systems, Firewalls, GPS-controlled logistics, Hardware, Hardware and software upgrades, Information Flow, Information Systems, Information Systems Audit (IS Audit), Infrastructure as a Service (IaaS), IoT (Internet of Things), IT Disaster Recovery Plan (DRP), IT General Controls, IT Governance, IT governance (COBIT 5), IT Investment Management, Leak detection system, Learning Management System (LMS), Legacy Systems, Middleware, Networks, Net-Zero Digital Platform, Operating Systems, Organization Transformation, Platform as a Service (PaaS), Robotic Process Automation (RPA), SAP, SAP Net-Zero Intelligence Platform, SD-WAN, Security, Sensory Online, Servers, Smart Expense platform, Smart Farm technology, Smart iLab, Software, Software as a Service (SaaS), System Development Life Cycle, System Reliability, Telecommunications network equipment, Telecommunications networks, Transaction Processing System (TPS), Unified materiality workflow, Unified Operation Center (UOC), Vendor Management System (VMS), Virtual Private Network (VPN), XBRL, XML.

Data Management (80 terms)

AI-powered mini applications, All Risk Intelligence (ARI), Aqueduct, Artificial Intelligence (AI), Big Data, Big Data analytics, Blockchain Technology, Business Intelligence (BI), Carbon footprint labels, carbon tax data, CDP benchmarking, Centralised data programs (Idea MANI), Cloud Computing, Continuous Auditing, Continuous Monitoring, Cost Accounting for ESG, Cybersecurity, Data Analytics, Data Filtering, Data governance, Data Integrity Assessment, Data Lake, Data Loss Prevention (DLP), Data Modeling, Data Quantifiability, Data Relevance, Data Visualization, Decision Support Systems (DSS), Digital Finance, Digital Index, Digital Indicator, Digital Transformation, DJSI benchmarking, Double materiality, Double materiality matrix, Emissions trading, Fama-French Model, Financial Reporting Quality, Fuzzy Logic (FISM), Fuzzy Logic (MICMAC), Fuzzy Modeling (FISM), Fuzzy Modeling (MICMAC), Generative AI personalisation, GMM Estimator, Green Innovation, Information Asymmetry Reduction, Information Integrity, Information Quality, ITEC Stock system, KRIs linked to KPIs, Machine Learning (ML), Managerial information, Metrics and Targets (KPIs), Natural Language Processing (NLP), Net Promoter Score (NPS), Predictive Modeling, Predictive Prediction, Propensity Score Matching (PSM), Proprietary Algorithms, Proprietary Techniques, Random Forest (RF), Real-time Reporting, Risk Assessment, Risk Assurance Map, Risk Management, Robotic Process Automation (RPA), Satellite traceability, Scope 3 roadmap with suppliers, Sentiment Analysis, Smart Contracts, Social cost of carbon, Statistical Packages (SmartPLS), Statistical Packages (SPSS), Statistical Packages (Stata), Structural Equation Modeling (SEM), TCFD & Aqueduct, Text Mining, Textual Analysis, Triple-entry accounting, Word Embedding Models.

Integration (82 terms)

3BB, All Request and All Service, Application Programming Interfaces (APIs), Automated data collection, Automated End-to-End Processes, Automation Platforms, AXONS Trace, AXONS VRegist, Blockchain Technology, Blockchain traceability, Budgeting Systems, Business Intelligence (BI), Centralized vendor management, Channel integration, CneXt HRIS integration, Collaboration with global partners, Communication Platform as a Service (CPaaS), Configuration, Connecting the entire organization to the network, Connectivity, Consolidated Platforms, Cross-functional collaboration, Cross-system dashboards, Customer Relationship Management (CRM), Data Flow, Data Mobility, Data sharing capability, Data Warehouse Integration, Decentralized systems, Digital Communication, Digital Supply Chain, E-Linking with Banking Systems, Electronic Data Interchange (EDI), End-to-End Business Processes, End-to-end solutions, Enterprise Integration Middleware, Enterprise Resource Planning

(ERP), ESG communication platforms, Extraction, Transformation, Load (ETL), E-Legal Excellence database, Governance, Risk, Compliance (GRC), IFRS S2 climate disclosure process, Information Flow Integration, Information Sharing, Intercompany Transactions, Interconnected elements, Internal Transparency, Interoperability, IS Alignment, IT Alignment, Managed services, Microsoft Teams (MST), Networking, Online-to-Offline (O2O), Operator Connect, Process Alignment, Process Control, Prompt Plus platform, Real-time access to information, Reconciliation Automation, Salesforce, Salesforce-based (Project FIT), SAP, Seamless Data Transmission, Secure System Development Life Cycle (SSDLC), Shared data across AP, Shared data across AR, Shared data across GL, Single information field, Smart Contracts, Software integration among organizational units, Solutions Integration Group, Stakeholder impact management, Supplier Codes of Conduct, Supply Chain Management (SCM), System of organizational sustainability governance, System Updates, System Upgrades, value chain data, Vendor Management System (VMS), XBRL, XML.

Security (86 terms)

Access Control, Application Control, Audit Assurance, Audit Committee Oversight, Audit Opinion, Audit Quality, Audit Trails, Authentication Systems, BitSight, Blockchain, Circular Economy (5Rs), Compliance Adherence, Confidentiality-Preserving, Corporate Document Management, CSOC, Cyber response drills, Cyberattack risk governance, Cybersecurity, Cybersecurity Framework (NIST), Data Availability, Data Confidentiality, Data Governance, Data governance for disclosure, Data Governance Program, Data Integrity, Data Management, Data Protection Strategies, Data Quality (DQ), Deception technology, Digital Transformation, Disaster recovery, Disaster recovery drills, Disaster Recovery Plan, Disaster Recovery Plan (DRP), Encryption, Environmental management system (QSHEB), firewalls, General Controls, Grievance mechanisms, Information and cyber security (G3), Information classification, Information Security Management System (ISMS), Information Security Policies, Internal Control Automation, Internal Control Systems, ISO 27001, ISO 27701, ISO Standards, IT Audit Competencies, IT General Controls (ITGCs), Logical Access Controls, Material Weaknesses (ICWs), Multi-Factor Authentication (MFA), PCI-DSS, PDPA, Penetration Testing (PT), Personal data protection policy, Policy Enforcement, Privacy Information Management System (PIMS), Privileged Access Management (PAM), Process Control, Ransomware/Malware, Regulatory Adherence, Risk Management/Assessment, Risk Monitoring, Security Operations Center (SOC), Security rating, Security Scorecard, Segregation of Duties

(SoD), SOC, SOX Compliance, Supplier Qualification System (FPT-SQS), System Configuration Control, System Continuity, System Integration, System Reliability, System Security, Tamper Resistance/Immutability, Technology & Cyber Security Committee, Traceability/Audit Trail, Two-Factor Authentication (2FA), Unintentional Errors/Clerical Errors, Vulnerability Assessment (VA), Web Application Firewall (WAF), Whistleblowing, whistleblowing mechanisms.

Table A2 Contextual polarity verbs and assigned weights

Existence (40 verbs, weight 1)

access, adopt, apply, audit, automate, cleanse, comply, connect, customise, customize, deploy, digitalize, embed, evaluate, execute, implement, innovate, install, integrate, interconnect, launch, license, link, manage, migrate, monitor, process, protect, record, retrieve, rollout, safeguard, secure, store, synchronize, unify, use, utilise, utilize, validate

Intent (11 verbs, weight 0.3)

consider, design, establish, explore, introduce, pilot, plan, prepare, study, test, trial

Supportive (33 verbs, weight 0.6)

align, analyze, assess, available, collaborate, combine, configure, consolidate, control, coordinate, detect, develop, enable, enhance, ensure, generate, leverage, maintain, modernize, operate, optimize, outsource, partner, pivot, prevent, review, standardize, streamline, support, track, transform, upgrade, visualize

Note that where more than one polarity verb occurs within the context window of a matched keyword, the match is scored as the mean of their weights. The current extraction engine does not detect negation or future-conditional constructions (see Section 5.4). Section 3.6 reports the sensitivity of results to alternative 1.0/0.5/0.0 and binary weighting schemes; at the time of this revision this check remained outstanding (Section 5.4).